LTC8841, LTC8842, LTC8844

Micro-Power 1.5 MHz, Low-Noise, RRIO, 1.8 V Precision Amplifiers

General Description

The LTC884x family of single-, dual-, and quad- channel amplifiers provides input offset voltage correction for low offset (maximum 350 µV) and drift (0.8 µV/°C) through the use of proprietary techniques. Featuring rail-to-rail input and output swings, and low quiescent current (typical 85 µA) combined with a wide bandwidth of 1.5 MHz and very low noise (25 nV/√Hz at 1 kHz) makes this family very attractive for a variety of battery-powered applications such as handsets, tablets, notebooks, and portable medical devices. The low input bias current supports these amplifiers to be used in applications with mega-ohm source impedances.

The robust design of the LTC884x amplifiers provides ease-of-use to the circuit designer: unity-gain stability with capacitive loads of up to 500 pF, integrated RF/EMI rejection filter, no phase reversal in overdrive conditions, and high electro-static discharge (ESD) protection (3-kV HBM). The LTC884x amplifiers are optimized for operation at voltages as low as +1.8 V (±0.9 V) and up to +5.5 V (±2.75 V) at the temperature range of 0 °C to 70 °C, and operation at voltages from +2.0 V (±1.0 V) to +5.5V (±2.75 V) over the extended temperature range of -40 °C to +125 °C

The LTC8841 (single) is available in both SOT23-5L and SC70-5L packages. The LTC8842 (dual) is offered in DFN2x2-8L, SOIC-8L, TSSOP-8L and MSOP-8L packages. The quad-channel LTC8844 is offered in QFN3x3-16L, SOIC-14L and TSSOP-14L packages.

Features and Benefits

- Precision: ±350 µV Maximum Input Offset Voltage
- Low Noise: 25 nV/√Hz at 1 kHz
- 1.5 MHz GBW for Unity-Gain Stable
- Micro-Power: 85 µA Supply Current Per Amplifier
- Single 1.8 V to 5.5 V Supply Voltage Range at 0 ℃ to 70 ℃
- Rail-to-Rail Input and Output
- Internal RF/EMI Filter
- Extended Temperature Range: −40℃ to +125℃

Applications

- Battery-Powered Instruments:
  - Consumer, Industrial, Medical, Notebooks
- Wireless Chargers
- Audio Outputs
- Sensor Signal Conditioning:
  - Sensor Interfaces, Loop-Powered, Active Filters
- Wireless Sensors:
  - Home Security, Remote Sensing, Wireless Metering

Pin Configurations (Top View)

LTC8841
SOT23-5L / SC70-5L

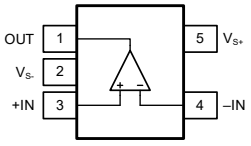

LTC8842
DFN2x2-8L

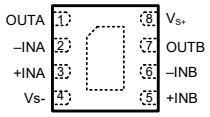

SOIC-8L / MSOP-8L/TSSOP-8L

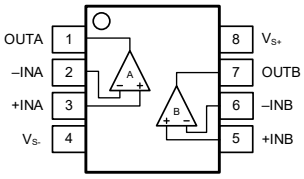

LTC8844
QFN3x3-16L

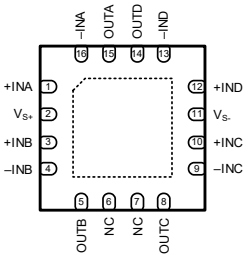

LTC8844
SOIC-14L / TSSOP-14L

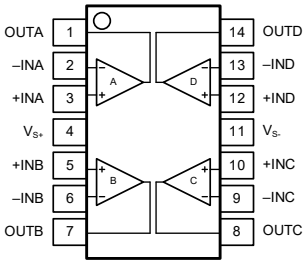

CAUTION: These devices are sensitive to electrostatic discharge; follow proper IC Handling Procedures.
Linearin and designs are registered trademarks of Linearin Technology Corporation.
© Copyright Linearin Technology Corporation. All Rights Reserved.
All other trademarks mentioned are the property of their respective owners.

Pin Description

Symbol	Description
–IN/–INA/–INB/–INC/–IND	Inverting input of the amplifier. The voltage range is from (V_{S-} – 0.1V) to (V_{S+} + 0.1V).
+IN/+INA/+INB/+INC/+IND	Non-inverting input of the amplifier. This pin has the same voltage range as –IN.
V_{S+}	Positive power supply.
V_{S-}	Negative power supply.
OUT/OUTA/OUTB/OUTC/OUTD	Amplifier output.

Ordering Information

Type Number	Package Name	Package Quantity	Marking Code
LTC8841XT5/R6	SOT23-5L	Tape and Reel, 3 000	AG1I
LTC8841XC5/R6	SC70-5L	Tape and Reel, 3 000	AG1I
LTC8842XF8/R6	DFN2x2-8L	Tape and Reel, 3 000	AG2IT
LTC8842XS8/R8	SOIC-8L	Tape and Reel, 4 000	AG2IX
LTC8842XV8/R6	MSOP-8L	Tape and Reel, 3 000	AG2IX
LTC8842XT8/R8	TSSOP-8L	Tape and Reel, 4 000	AG2IX, AG2T
LTC8844XF16/R10	QFN3x3-16L	Tape and Reel, 5 000	AG4IT, AG4T
LTC8844XS14/R5	SOIC-14L	Tape and Reel, 2 500	AG4IX
LTC8844XT14/R6	TSSOP-14L	Tape and Reel, 3 000	AG4IX

(1) There may be multiple device markings, a varied marking character of "x", or additional marking, which relates to the logo, the lot trace code information, or the environmental category on the device.

Limiting Value

In accordance with the Absolute Maximum Rating System (IEC 60134).

Parameter	Absolute Maximum Rating
Supply Voltage, V_{S+} to V_{S-}	10.0 V
Signal Input Terminals: Voltage, Current	V_{S-} – 0.5 V to V_{S+} + 0.5 V, ±10 mA
Output Short-Circuit	Continuous
Storage Temperature Range, T_{stg}	–65 °C to +150 °C
Junction Temperature, T_J	150 °C
Lead Temperature Range (Soldering 10 sec)	260 °C

ESD Rating

Parameter	Item	Value	Unit
Electrostatic Discharge Voltage	Human body model (HBM), per ANSI/ESDA/JEDEC JS-001	3 000	V
	Charged device model (CDM), per ANSI/ESDA/JEDEC JS-002	2 000	

CAUTION: These devices are sensitive to electrostatic discharge; follow proper IC Handling Procedures.
Linearin and designs are registered trademarks of Linearin Technology Corporation.
© Copyright Linearin Technology Corporation. All Rights Reserved.
All other trademarks mentioned are the property of their respective owners.

Electrical Characteristics

V_S = 5.0 V, T_A = +25°C, V_{CM} = V_S/2, V_O = V_S/2, and R_L = 10 kΩ connected to V_S/2, unless otherwise noted. Boldface limits apply over the specified temperature range, T_A = −40 to +125 °C.

Parameter	Symbol	Conditions	Min.	Typ.	Max.	Unit
OFFSET VOLTAGE						
Input offset voltage	V_{OS}	LTC8841, LTC8842		±100	±350	µV
		LTC8844		±120	±500	
Offset voltage drift	V_{OS} TC	T_A = −40 to +125 °C		±0.8	±2.3	µV/°C
Power supply rejection ratio	PSRR	V_S = 2.0 to 5.5 V, V_{CM} < V_{S+} − 2V	85	112		dB
		T_A = −40 to +125 °C	75			
INPUT BIAS CURRENT						
Input bias current	I_B			1		pA
		T_A = +85 °C		150		
		T_A = +125 °C		500		
Input offset current	I_{OS}			1		pA
NOISE						
Input voltage noise	V_n	f = 0.1 to 10 Hz		5.6		$µV_{P-P}$
Input voltage noise density	e_n	f = 10 kHz		22		nV/√Hz
		f = 1 kHz		25		
Input current noise density	I_n	f = 1 kHz		3		fA/√Hz
INPUT VOLTAGE						
Common-mode voltage range	V_{CM}		V_{S-}−0.1		V_{S+}+0.1	V
Common-mode rejection ratio	CMRR	V_S = 5.5 V, V_{CM} = −0.1 to 3.5 V	76	96		dB
		V_{CM} = 0 to 5.3 V, T_A = −40 to +125 °C	75			
		V_S = 5.5 V, V_{CM} = 4.5 to 5.6 V	60	90		
		V_{CM} = 0 to 1.8 V, T_A = −40 to +125 °C	72			
INPUT IMPEDANCE						
Input capacitance	C_{IN}	Differential		2.0		pF
		Common mode		3.5		
OPEN-LOOP GAIN						
Open-loop voltage gain	A_{VOL}	R_L = 10 kΩ, V_O = 0.05 to 3.5 V	90	105		dB
		T_A = −40 to +125 °C	85			
		R_L = 2 kΩ, V_O = 0.15 to 3.5 V	84	100		
		T_A = −40 to +125 °C	80			
FREQUENCY RESPONSE						
Gain bandwidth product	GBW			1.5		MHz
Slew rate	SR	G = +1, C_L = 100 pF, V_O = 1.5 to 3.5 V	0.55	1.2	1.65	V/µs
Total harmonic distortion + noise	THD+N	G = +1, f = 1 kHz, V_O = 0.5 V_{RMS}		0.002		%
Settling time	t_S	To 0.1%, G = +1, 1V step		1.2		µs
		To 0.01%, G = +1, 1V step		1.5		
Overload recovery time	t_{OR}	V_{IN} * Gain > V_S		2		µs

CAUTION: These devices are sensitive to electrostatic discharge; follow proper IC Handling Procedures.
Linearin and designs are registered trademarks of Linearin Technology Corporation.
© Copyright Linearin Technology Corporation. All Rights Reserved.
All other trademarks mentioned are the property of their respective owners.

Electrical Characteristics (continued)

V_S = 5.0 V, T_A = +25°C, V_{CM} = V_S/2, V_O = V_S/2, and R_L = 10 kΩ connected to V_S/2, unless otherwise noted. Boldface limits apply over the specified temperature range, T_A = −40 to +125 °C.

Parameter	Symbol	Conditions	Min.	Typ.	Max.	Unit
OUTPUT						
High output voltage swing	V_{OH}	R_L = 10 kΩ	V_{S+}−22	V_{S+}−13		mV
		R_L = 2 kΩ	V_{S+}−102	V_{S+}−65		
Low output voltage swing	V_{OL}	R_L = 10 kΩ		V_{S-}+8	V_{S-}+11	mV
		R_L = 2 kΩ		V_{S-}+39	V_{S-}+51	
Short-circuit current	I_{SC}	Source current through 10Ω		45		mA
		Sink current through 10Ω		55		
POWER SUPPLY						
Operating supply voltage	V_S	T_A = 0 to +70 °C	1.8		5.5	V
		T_A = −40 to +125 °C	2.0		5.5	
Quiescent current (per amplifier)	I_Q	V_S = 2.0V		85	125	µA
		V_S = 5.5 V			155	
THERMAL CHARACTERISTICS						
Operating temperature range	T_A		−40		+125	°C
Package Thermal Resistance	θ_{JA}	SC70-5L		333		°C/W
		SOT23-5L		190		
		DFN2x2-8L		94		
		MSOP-8L		201		
		SOIC-8L		125		
		TSSOP-8L		160		
		QFN3x3-16L		65		
		TSSOP-14L		112		
		SOIC-14L		115		

CAUTION: These devices are sensitive to electrostatic discharge; follow proper IC Handling Procedures.
Linearin and designs are registered trademarks of Linearin Technology Corporation.
© Copyright Linearin Technology Corporation. All Rights Reserved.
All other trademarks mentioned are the property of their respective owners.

Typical Performance Characteristics

At T_A = +25°C, V_{CM} = V_S/2, and R_L = 10kΩ connected to V_S/2, unless otherwise noted.

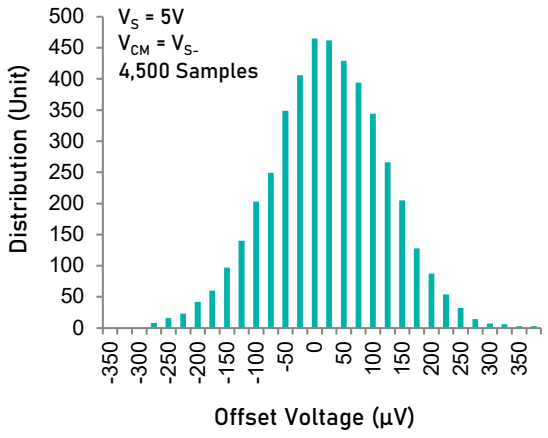

Offset Voltage Production Distribution.

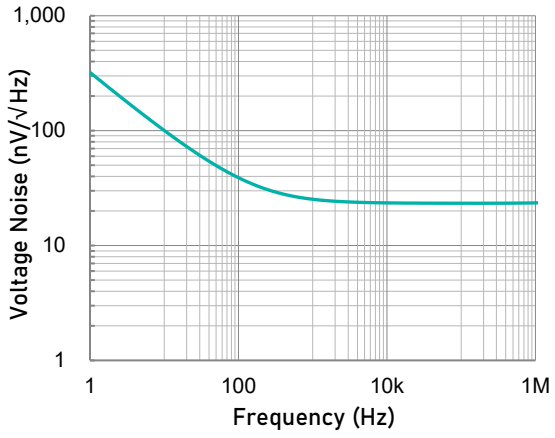

Input Voltage Noise Spectral Density as a function of Frequency.

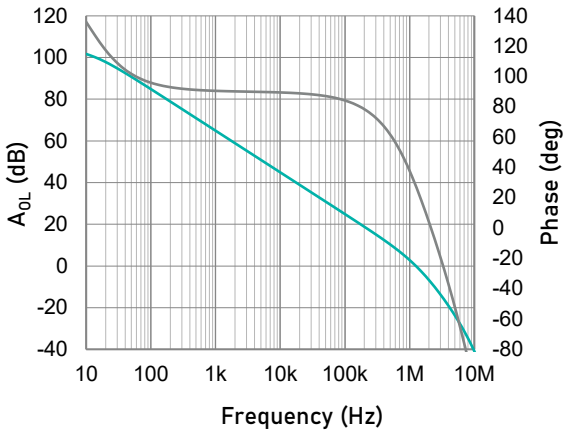

Open-loop Gain and Phase as a function of Frequency.

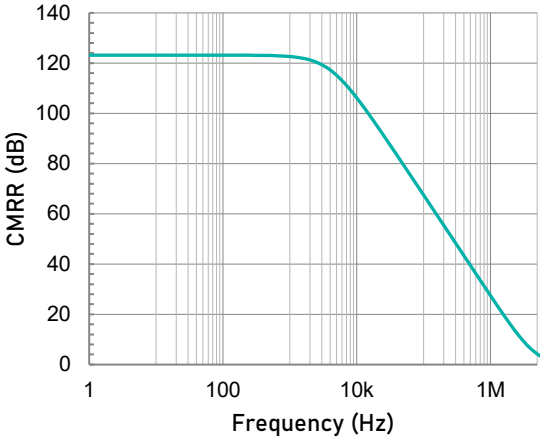

Common-mode Rejection Ratio as a function of Frequency.

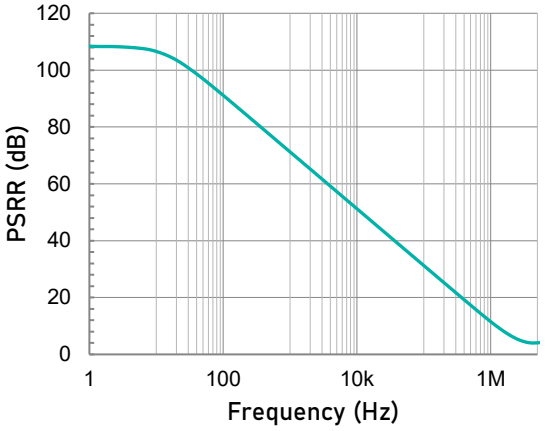

Power Supply Rejection Ratio as a function of Frequency.

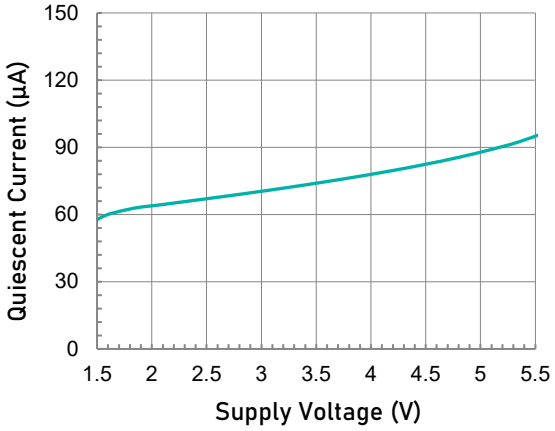

Quiescent Current as a function of Supply Voltage.

CAUTION: These devices are sensitive to electrostatic discharge; follow proper IC Handling Procedures.
Linearin and designs are registered trademarks of Linearin Technology Corporation.
© Copyright Linearin Technology Corporation. All Rights Reserved.
All other trademarks mentioned are the property of their respective owners.

Typical Performance Characteristics (continued)

At T_A = +25°C, V_{CM} = V_S/2, and R_L = 10kΩ connected to V_S/2, unless otherwise noted.

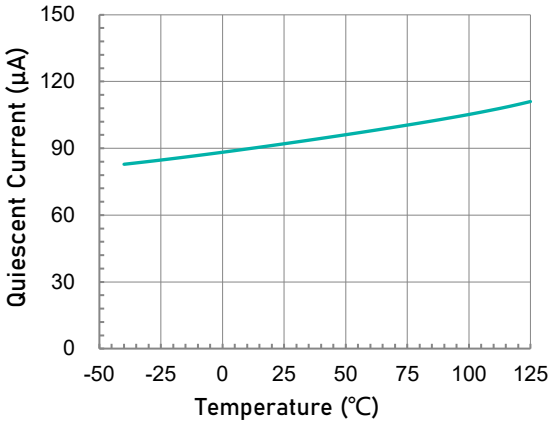

Quiescent Current as a function of Temperature.

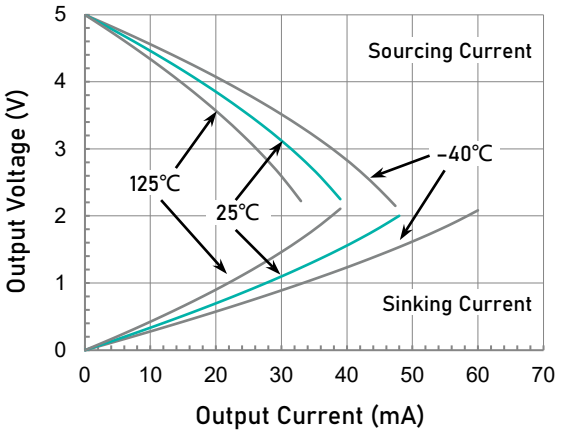

Output Voltage Swing as a function of Output Current.

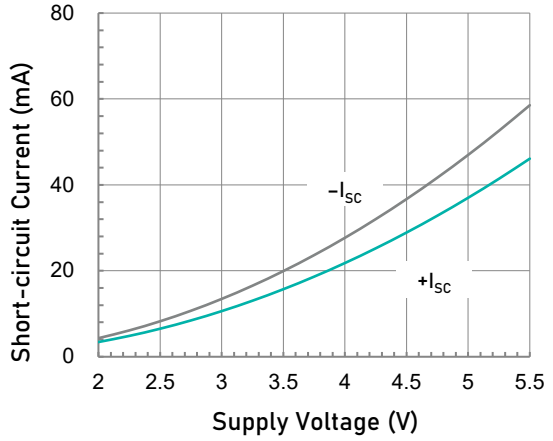

Short-circuit Current as a function of Supply Voltage.

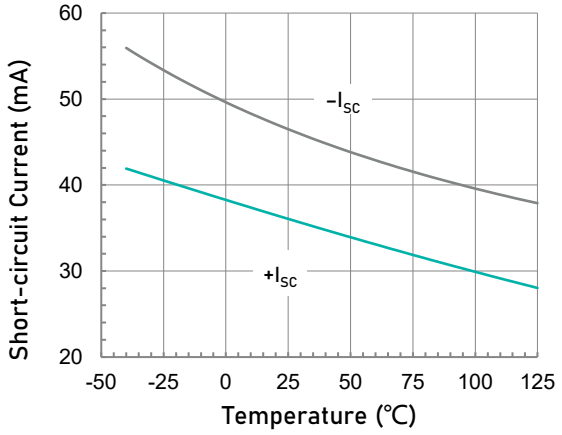

Short-circuit Current as a function of Temperature.

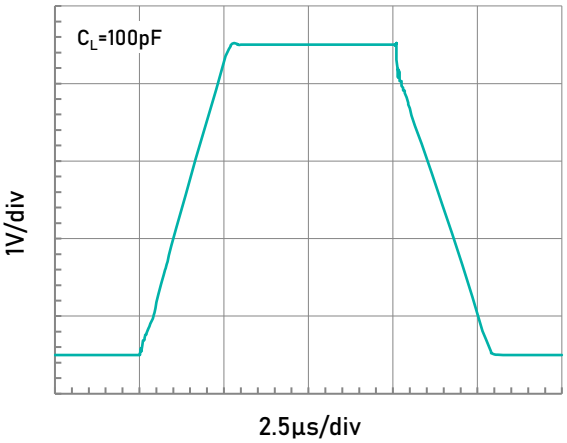

Large Signal Step Response.

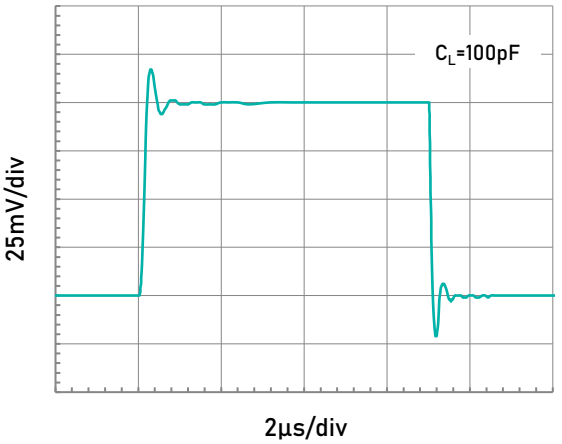

Small Signal Step Response.

CAUTION: These devices are sensitive to electrostatic discharge; follow proper IC Handling Procedures.
Linearin and designs are registered trademarks of Linearin Technology Corporation.
© Copyright Linearin Technology Corporation. All Rights Reserved.
All other trademarks mentioned are the property of their respective owners.

Application Notes

The LTC884x is a family of low-power, rail-to-rail input and output operational amplifiers specifically designed for portable applications. These devices operate from 1.8 V to 5.5 V at the temperature range of 0 °C to 70 °C, are unity-gain stable, and suitable for a wide range of general-purpose applications. The class AB output stage is capable of driving ≤ 10-kΩ loads connected to any point between V_{S+} and ground. The input common-mode voltage range includes both rails, and allows the LTC884x family to be used in virtually any single-supply application. Rail-to-rail input and output swing significantly increases dynamic range, especially in low-supply applications, and makes them ideal for driving sampling analog-to-digital converters (ADCs).

The LTC884x features 1.5-MHz bandwidth and 1.2-V/µs slew rate with only 85-µA supply current per amplifier, providing good ac performance at very low power consumption. DC applications are also well served with a low input noise voltage of 25-nV/√Hz at 1-kHz, low input bias current, and an input offset voltage of 120-µV typically. The typical offset voltage drift is 0.8-µV/°C, over the full temperature range the input offset voltage changes only 80-µV (120-µV to 200-µV).

OPERATING VOLTAGE

The LTC884x family is optimized for operation at voltages as low as +1.8 V (±0.9 V) and up to +5.5 V (±2.75 V) at the temperature range of 0 °C to 70 °C, and fully specified and ensured for operation from 2.0 V to 5.5 V (±1.0 V to ±2.75 V). In addition, many specifications apply from –40 °C to +125 °C. Parameters that vary significantly with operating voltages or temperature are illustrated in the Typical Characteristics graphs.

NOTE: Supply voltages (V_{S+} to V_{S-}) higher than +10 V can permanently damage the device.

RAIL-TO-RAIL INPUT

The input common-mode voltage range of the LTC884x series extends 100-mV beyond the negative and positive supply rails. This performance is achieved with a complementary input stage: an N-channel input differential pair in parallel with a P-channel differential pair. The N-channel pair is active for input voltages close to the positive rail, typically V_{S+}–1.4 V to the positive supply, whereas the P-channel pair is active for inputs from 100-mV below the negative supply to approximately V_{S+}–1.4 V. There is a small transition region, typically V_{S+}–1.2 V to V_{S+}–1 V, in which both pairs are on. This 200-mV transition region can vary up to 200-mV with process variation. Thus, the transition region (both stages on) can range from V_{S+}–1.4 V to V_{S+}–1.2 V on the low end, up to V_{S+}–1 V to V_{S+}–0.8 V on the high end. Within this transition region, PSRR, CMRR, offset voltage, offset drift, and THD can be degraded compared to device operation outside this region.

The typical input bias current of the LTC884x during normal operation is approximately 1-pA. In overdriven conditions, the bias current can increase significantly. The most common cause of an overdriven condition occurs when the operational amplifier is outside of the linear range of operation. When the output of the operational amplifier is driven to one of the supply rails, the feedback loop requirements cannot be satisfied and a differential input voltage develops across the input pins. This differential input voltage results in activation of parasitic diodes inside the front-end input chopping switches that combine with electromagnetic interference (EMI) filter resistors to create the equivalent circuit. Notice that the input bias current remains within specification in the linear region.

INPUT EMI FILTER AND CLAMP CIRCUIT

Figure 1 shows the input EMI filter and clamp circuit. The LTC884x op-amps have internal ESD protection diodes (D1, D2, D3, and D4) that are connected between the inputs and each supply rail. These diodes protect the input transistors in the event of electrostatic discharge and are reverse biased during normal operation. This protection scheme allows voltages as high as approximately 500-mV beyond the rails to be applied at the input of either terminal without causing permanent damage. These ESD protection current-steering diodes also provide in-circuit, input overdrive protection, as long as the current is limited to 20-mA as stated in the Absolute Maximum Ratings.

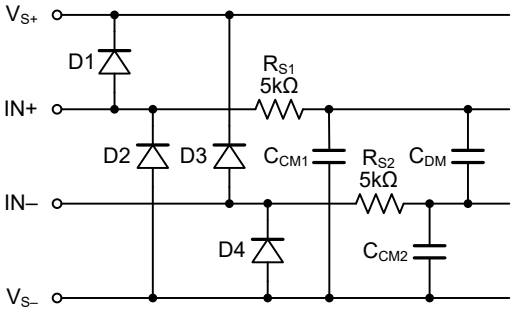

Figure 1. Input EMI Filter and Clamp Circuit

Operational amplifiers vary in susceptibility to EMI. If conducted EMI enters the operational amplifier, the dc offset at the amplifier output can shift from its nominal value when EMI is present. This shift is a result of signal rectification associated with the internal semiconductor junctions. Although all operational amplifier pin functions can be affected by EMI, the input pins are likely to be the most susceptible. The EMI filter of the LTC884x family is

CAUTION: These devices are sensitive to electrostatic discharge; follow proper IC Handling Procedures.
Linearin and designs are registered trademarks of Linearin Technology Corporation.
© Copyright Linearin Technology Corporation. All Rights Reserved.
All other trademarks mentioned are the property of their respective owners.

Application Notes (continued)

composed of two 5-kΩ input series resistors (R_{S1} and R_{S2}), two common-mode capacitors (C_{CM1} and C_{CM2}), and a differential capacitor (C_{DM}). These RC networks set the –3 dB low-pass cutoff frequencies at 35-MHz for common-mode signals, and at 22-MHz for differential signals.

RAIL-TO-RAIL OUTPUT

Designed as a micro-power operational amplifier, the LTC884x delivers a robust output drive capability. A class AB output stage with common-source transistors is used to achieve full rail-to-rail output swing capability. For resistive loads up to 50-kΩ, the output swings typically to within 5-mV of either supply rail regardless of the power-supply voltage applied. Different load conditions change the ability of the amplifier to swing close to the rails. For resistive loads up to 600-Ω, the output swings typically to within 200-mV of the positive supply rail and within 135-mV of the negative supply rail.

CAPACITIVE LOAD AND STABILITY

The LTC884x family can safely drive capacitive loads of up to 500-pF in any configuration. As with most amplifiers, driving larger capacitive loads than specified may cause excessive overshoot and ringing, or even oscillation. A heavy capacitive load reduces the phase margin and causes the amplifier frequency response to peak. Peaking corresponds to over-shooting or ringing in the time domain. Therefore, it is recommended that external compensation be used if the LTC884x op-amps must drive a load exceeding 500-pF. This compensation is particularly important in the unity-gain configuration, which is the worst case for stability.

A quick and easy way to stabilize the op-amp for capacitive load drive is by adding a series resistor, R_{ISO}, between the amplifier output terminal and the load capacitance, as shown in Figure 2. R_{ISO} isolates the amplifier output and feedback network from the capacitive load. The bigger the R_{ISO} resistor value, the more stable V_{OUT} will be. Note that this method results in a loss of gain accuracy because R_{ISO} forms a voltage divider with the R_L.

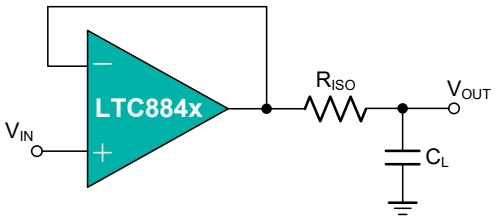

Figure 2. Indirectly Driving Heavy Capacitive Load

An improvement circuit is shown in Figure 3. It provides DC accuracy as well as AC stability. The R_F provides the DC accuracy by connecting the inverting signal with the output.

The C_F and R_{ISO} serve to counteract the loss of phase margin by feeding the high frequency component of the output signal back to the amplifier's inverting input, thereby preserving phase margin in the overall feedback loop.

For no-buffer configuration, there are two others ways to increase the phase margin: (a) by increasing the amplifier's gain, or (b) by placing a capacitor in parallel with the feedback resistor to counteract the parasitic capacitance associated with inverting node.

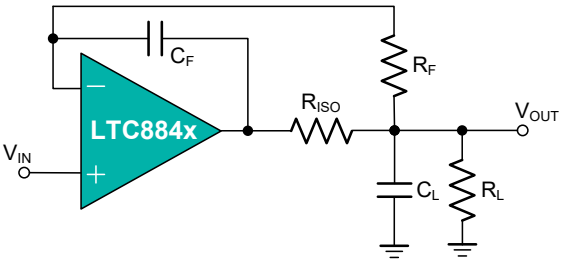

Figure 3. Indirectly Driving Heavy Capacitive Load with DC Accuracy

OVERLOAD RECOVERY

Overload recovery is defined as the time required for the operational amplifier output to recover from a saturated state to a linear state. The output devices of the operational amplifier enter a saturation region when the output voltage exceeds the rated operating voltage, either because of the high input voltage or the high gain. After the device enters the saturation region, the charge carriers in the output devices require time to return back to the linear state. After the charge carriers return back to the linear state, the device begins to slew at the specified slew rate. Thus, the propagation delay in case of an overload condition is the sum of the overload recovery time and the slew time. The overload recovery time for the LTC884x family is approximately 2-µs.

EMI REJECTION RATIO

Circuit performance is often adversely affected by high frequency EMI. When the signal strength is low and transmission lines are long, an op-amp must accurately amplify the input signals. However, all op-amp pins — the non-inverting input, inverting input, positive supply, negative supply, and output pins — are susceptible to EMI signals. These high frequency signals are coupled into an op-amp by various means, such as conduction, near field radiation, or far field radiation. For example, wires and printed circuit board (PCB) traces can act as antennas and pick up high frequency EMI signals.

CAUTION: These devices are sensitive to electrostatic discharge; follow proper IC Handling Procedures.
Linearin and designs are registered trademarks of Linearin Technology Corporation.
© Copyright Linearin Technology Corporation. All Rights Reserved.
All other trademarks mentioned are the property of their respective owners.

Application Notes (continued)

Amplifiers do not amplify EMI or RF signals due to their relatively low bandwidth. However, due to the nonlinearities of the input devices, op-amps can rectify these out of band signals. When these high frequency signals are rectified, they appear as a dc offset at the output.

The LTC884x op-amps have integrated EMI filters at their input stage. A mathematical method of measuring EMIRR is defined as follows:

$$EMIRR = 20 \log (V_{IN_PEAK} / \Delta V_{OS})$$

INPUT-TO-OUTPUT COUPLING

To minimize capacitive coupling, the input and output signal traces should not be parallel. This helps reduce unwanted positive feedback.

MAXIMIZING PERFORMANCE THROUGH PROPER LAYOUT

To achieve the maximum performance of the extremely high input impedance and low offset voltage of the LTC884x op-amps, care is needed in laying out the circuit board. The PCB surface must remain clean and free of moisture to avoid leakage currents between adjacent traces. Surface coating of the circuit board reduces surface moisture and provides a humidity barrier, reducing parasitic resistance on the board. The use of guard rings around the amplifier inputs further reduces leakage currents. Figure 4 shows proper guard ring configuration and the top view of a surface-mount layout. The guard ring does not need to be a specific width, but it should form a continuous loop around both inputs. By setting the guard ring voltage equal to the voltage at the non-inverting input, parasitic capacitance is minimized as well. For further reduction of leakage currents, components can be mounted to the PCB using Teflon standoff insulators.

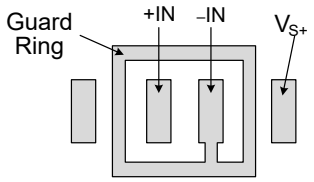

Figure 4. Use a guard ring around sensitive pins

Other potential sources of offset error are thermoelectric voltages on the circuit board. This voltage, also called Seebeck voltage, occurs at the junction of two dissimilar metals and is proportional to the temperature of the junction. The most common metallic junctions on a circuit board are solder-to-board trace and solder-to-component lead. If the temperature of the PCB at one end of the component is different from the temperature at the other end, the resulting Seebeck voltages are not equal, resulting in a thermal voltage error.

This thermocouple error can be reduced by using dummy components to match the thermoelectric error source. Placing the dummy component as close as possible to its partner ensures both Seebeck voltages are equal, thus canceling the thermocouple error. Maintaining a constant ambient temperature on the circuit board further reduces this error. The use of a ground plane helps distribute heat throughout the board and reduces EMI noise pickup.

CAUTION: These devices are sensitive to electrostatic discharge; follow proper IC Handling Procedures.
Linearin and designs are registered trademarks of Linearin Technology Corporation.
© Copyright Linearin Technology Corporation. All Rights Reserved.
All other trademarks mentioned are the property of their respective owners.

Typical Application Circuits

DIFFERENTIAL AMPLIFIER

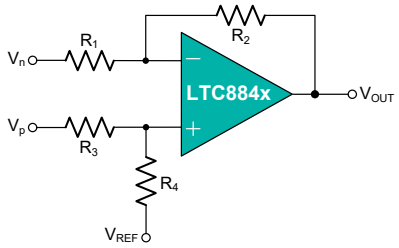

Figure 5. Differential Amplifier

The circuit shown in Figure 5 performs the difference function. If the resistors ratios are equal $R_4/R_3 = R_2/R_1$, then:

$$V_{OUT} = (V_p - V_n) \times R_2/R_1 + V_{REF}$$

INSTRUMENTATION AMPLIFIER

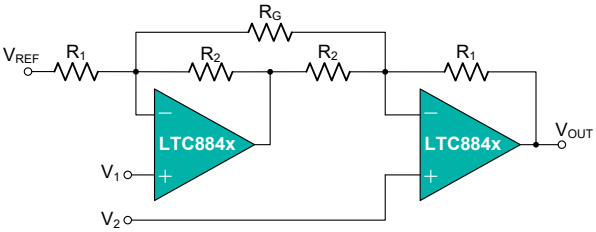

$$V_{OUT} = (V_1 - V_2)(1 + \frac{R_1}{R_2} + \frac{2R_1}{R_G}) + V_{REF}$$

Figure 6. Instrumentation Amplifier

The LTC884x family is well suited for conditioning sensor signals in battery-powered applications. Figure 6 shows a two op-amp instrumentation amplifier, using the LTC884x op-amps. The circuit works well for applications requiring rejection of common-mode noise at higher gains. The reference voltage (V_{REF}) is supplied by a low-impedance source. In single voltage supply applications, the V_{REF} is typically $V_S/2$.

BUFFERED CHEMICAL SENSORS

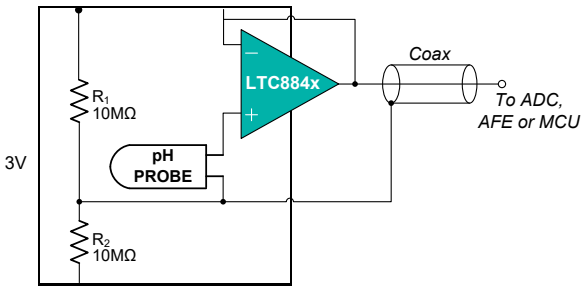

All components contained within the pH probe

Figure 7. Buffered pH Probe

The LTC884x family has input bias current in the pA range. This is ideal in buffering high impedance chemical sensors, such as pH probes. As an example, the circuit in Figure 7 eliminates expansive low-leakage cables that that is required to connect a pH probe (general purpose combination pH probes, e.g Corning 476540) to metering ICs such as ADC, AFE and/or MCU. A LTC884x op-amp and a lithium battery are housed in the probe assembly. A conventional low-cost coaxial cable can be used to carry the op-amp's output signal to subsequent ICs for pH reading.

MOTOR PHASE CURRENT SENSING AMPLIFIER

The current sensing amplification shown in Figure 8 has a slew rate of $2\pi f V_{PP}$ for the output of sine wave signal, and has a slew rate of $2fV_{PP}$ for the output of triangular wave signal. In most of motor control systems, the PWM frequency is at 10 kHz to 20 kHz, and one cycle time is 100 µs for a 10 kHz of PWM frequency. In current shunt monitoring for a motor phase, the phase current is converted to a phase voltage signal for ADC sampling. This sampling voltage signal must be settled before entering the ADC. As the Figure 8 shown, the total settling time of a current shunt monitor circuit includes: the rising edge delay time (t_{SR}) due to the op-amp's slew rate, and the measurement settling time (t_{SET}). For a 3-shunt solution in motor phase current sensing, if the smaller duty cycle of the PWM is defined at 45% (In fact, the phase with minimum PWM duty cycle, such as 5%, is not detected current directly, and it can be calculated from the other two phase currents), and the t_{SR} is required at 20% of a total time window for a phase current monitoring, in case of a 3.3 V motor control system (3.3 V MCU with 12-bit ADC), the op-amp's slew rate should be more than:

$$3.3V / (100\mu s \times 45\% \times 20\%) = 0.37\ V/\mu s$$

At the same time, the op-amp's bandwidth should be much greater than the PWM frequency, like 10 time at least.

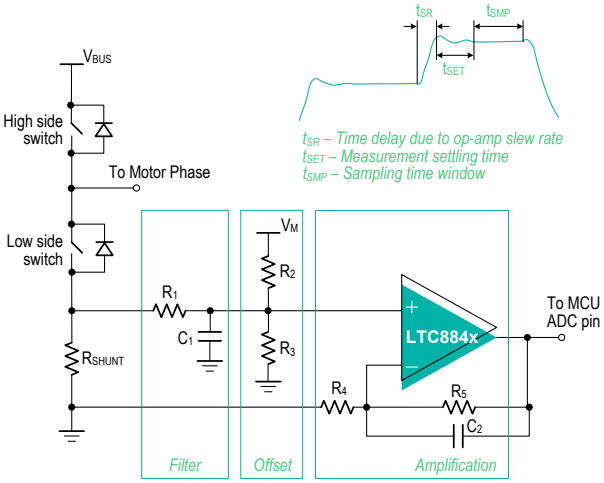

Figure 8. Current Shunt Monitor Circuit

CAUTION: These devices are sensitive to electrostatic discharge; follow proper IC Handling Procedures.
Linearin and designs are registered trademarks of Linearin Technology Corporation.
© Copyright Linearin Technology Corporation. All Rights Reserved.
All other trademarks mentioned are the property of their respective owners.

Tape and Reel Information

REEL DIMENSIONS

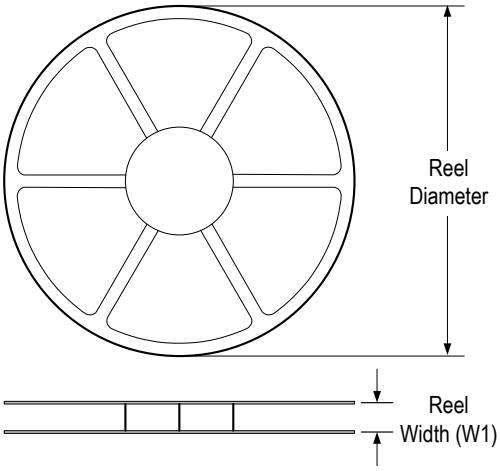

TAPE DIMENSIONS

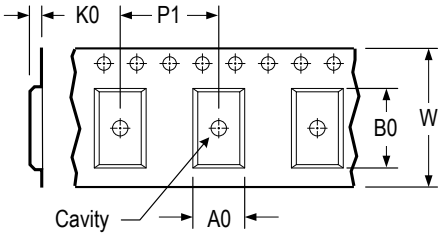

A0	Dimension designed to accommodate the component width
B0	Dimension designed to accommodate the component length
K0	Dimension designed to accommodate the component thickness
W	Overall width of the carrier tape
P1	Pitch between successive cavity centers

QUADRANT ASSIGNMENTS FOR PIN 1 ORIETATION IN TAPE

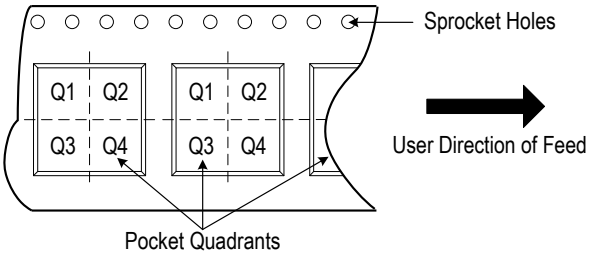

* All dimensions are nominal

Device	Package Type	Pins	SPQ	Reel Diameter (mm)	Reel Width W1 (mm)	A0 (mm)	B0 (mm)	K0 (mm)	P1 (mm)	W (mm)	Pin 1 Quadrant
LTC8841XT5/R6	SOT23	5	3 000	178	9.5	3.3	3.2	1.5	4.0	8.0	Q3
LTC8841XC5/R6	SC70	5	3 000	178	9.5	3.3	3.2	1.5	4.0	8.0	Q3
LTC8842XF8/R6	DFN2x2	8	3 000	178	9.5	2.25	2.25	1.0	4.0	8.0	Q1
LTC8842XS8/R8	SOIC	8	4 000	330	12.5	6.6	5.3	2.0	8.0	12.0	Q1
LTC8842XV8/R6	MSOP	8	3 000	330	12.5	5.0	3.5	2.0	8.0	12.0	Q1
LTC8842XT8/R8	TSSOP	8	4 000	330	12.5	6.5	4.0	1.2	8.0	12.0	Q1
LTC8844XF16/R10	QFN3x3	16	5 000	330	12.5	3.5	3.5	1.2	8.0	12.0	Q1
LTC8844XS14/R5	SOIC	14	2 500	330	16.5	6.5	9.5	2.0	8.0	16.0	Q1
LTC8844XT14/R6	TSSOP	14	3 000	330	16.5	6.9	5.5	1.3	8.0	16.0	Q1

CAUTION: These devices are sensitive to electrostatic discharge; follow proper IC Handling Procedures.
Linearin and designs are registered trademarks of Linearin Technology Corporation.
© Copyright Linearin Technology Corporation. All Rights Reserved.
All other trademarks mentioned are the property of their respective owners.

Package Outlines

DIMENSIONS, SOT23-5L

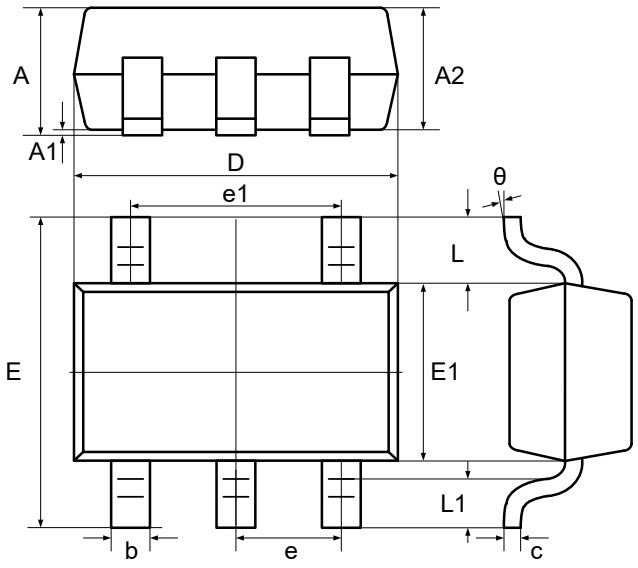

Symbol	Dimensions In Millimeters		Dimensions In Inches	
	Min	Max	Min	Max
A	-	1.25	-	0.049
A1	0.04	0.10	0.002	0.004
A2	1.00	1.20	0.039	0.047
b	0.33	0.41	0.013	0.016
c	0.15	0.19	0.006	0.007
D	2.820	3.02	0.111	0.119
E1	1.50	1.70	0.059	0.067
E	2.60	3.00	0.102	0.118
e	0.95 BSC		0.037 BSC	
e1	1.90 BSC		0.075 BSC	
L	0.60 REF		0.024 REF	
L1	0.30	0.60	0.012	0.024
θ	0°	8°	0°	8°

RECOMMENDED SOLDERING FOOTPRINT, SOT23-5L

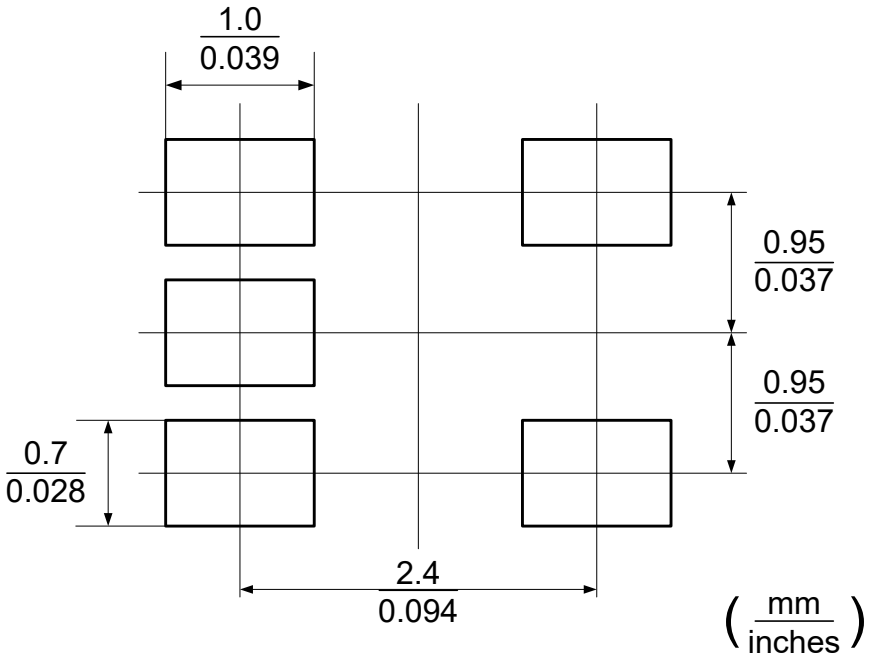

CAUTION: These devices are sensitive to electrostatic discharge; follow proper IC Handling Procedures.
Linearin and designs are registered trademarks of Linearin Technology Corporation.
© Copyright Linearin Technology Corporation. All Rights Reserved.
All other trademarks mentioned are the property of their respective owners.

Package Outlines (continued)

DIMENSIONS, SC70-5L (SOT353)

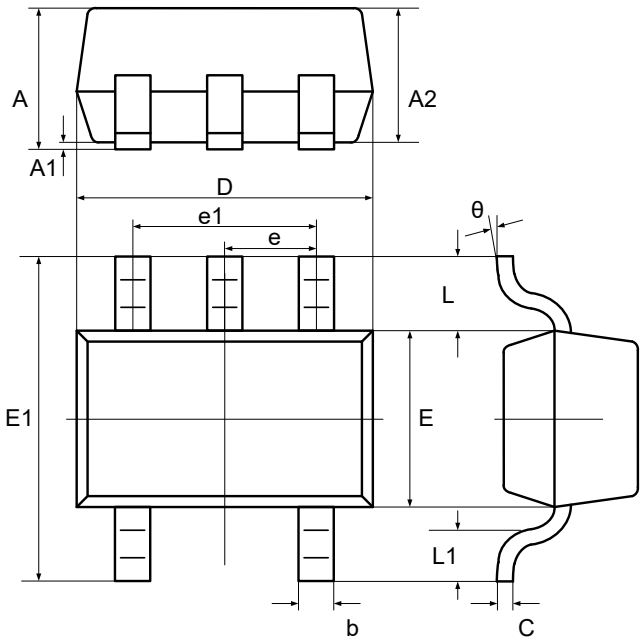

Symbol	Dimensions In Millimeters		Dimensions In Inches	
	Min	Max	Min	Max
A	0.90	1.10	0.035	0.043
A1	0.00	0.10	0.000	0.004
A2	0.90	1.00	0.035	0.039
b	0.15	0.35	0.006	0.014
C	0.08	0.15	0.003	0.006
D	2.00	2.20	0.079	0.087
E	1.15	1.35	0.045	0.053
E1	2.15	2.45	0.085	0.096
e	0.65 typ.		0.026 typ.	
e1	1.20	1.40	0.047	0.055
L	0.525 ref.		0.021 ref.	
L1	0.26	0.46	0.010	0.018
θ	0°	8°	0°	8°

RECOMMENDED SOLDERING FOOTPRINT, SC70-5L (SOT353)

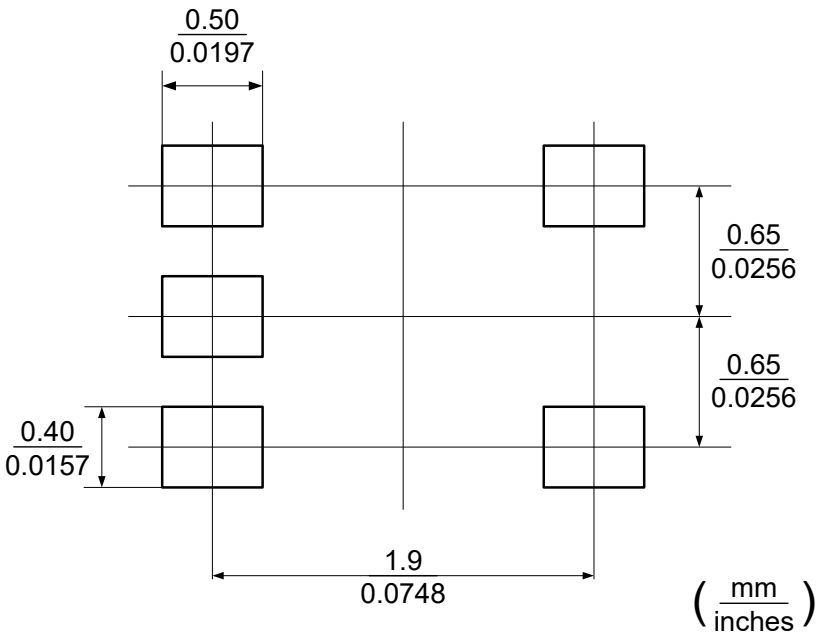

CAUTION: These devices are sensitive to electrostatic discharge; follow proper IC Handling Procedures.
Linearin and designs are registered trademarks of Linearin Technology Corporation.
© Copyright Linearin Technology Corporation. All Rights Reserved.
All other trademarks mentioned are the property of their respective owners.

Package Outlines (continued)

DIMENSIONS, DFN2x2-8L

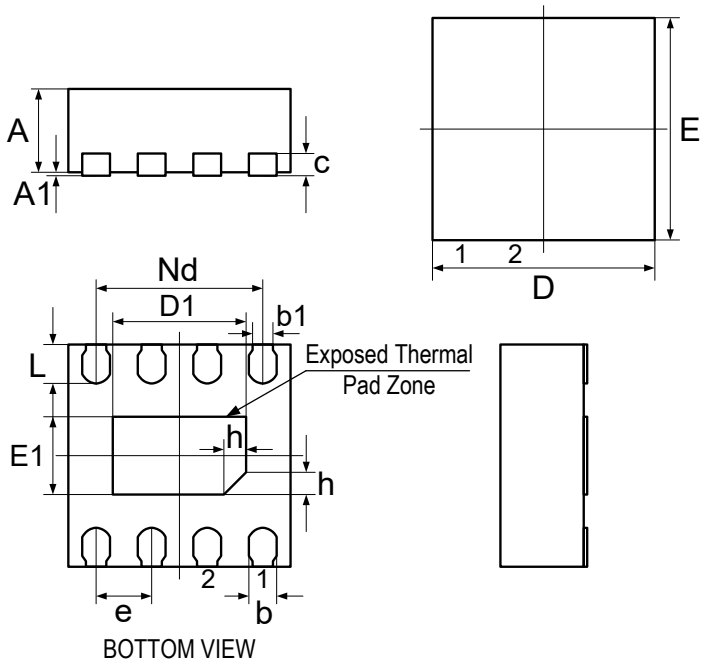

Symbol	Millimeters		
	Min.	Nom.	Max.
A	0.70	0.75	0.80
A1	-	0.02	0.05
b	0.20	0.25	0.30
b1		0.18 REF	
c	0.18	0.20	0.25
D	1.90	2.00	2.10
D1	1.10	1.20	1.30
Nd		1.50BSC	
E	1.90	2.00	2.10
E1	0.60	0.70	0.80
e		0.50BSC	
L	0.30	0.35	0.40
h	0.15	0.20	0.25

RECOMMENDED SOLDERING FOOTPRINT, DFN2x2-8L

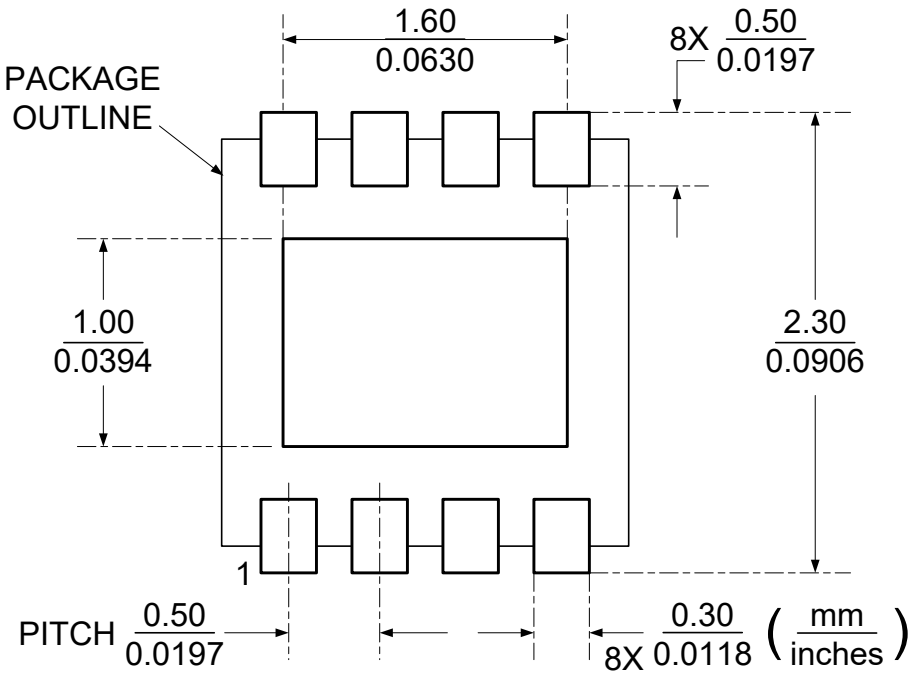

CAUTION: These devices are sensitive to electrostatic discharge; follow proper IC Handling Procedures.
Linearin and designs are registered trademarks of Linearin Technology Corporation.
© Copyright Linearin Technology Corporation. All Rights Reserved.
All other trademarks mentioned are the property of their respective owners.

Package Outlines (continued)

DIMENSIONS, SOIC-8L

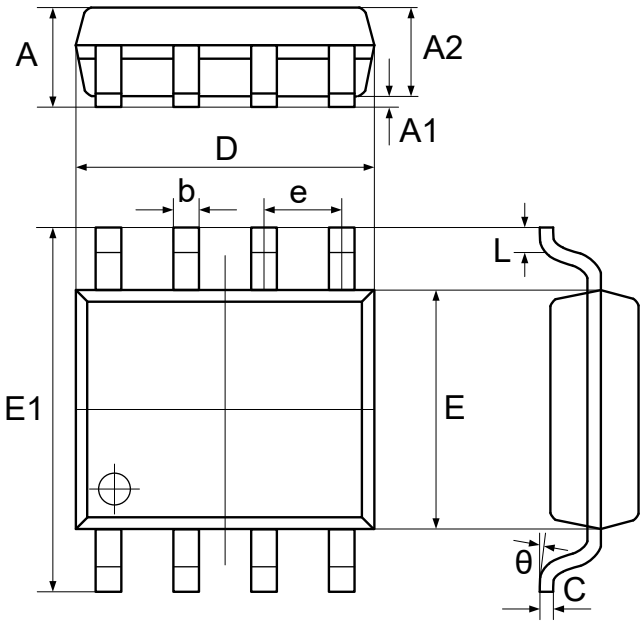

Symbol	Dimensions In Millimeters		Dimensions In Inches	
	Min	Max	Min	Max
A	1.370	1.670	0.054	0.066
A1	0.070	0.170	0.003	0.007
A2	1.300	1.500	0.051	0.059
b	0.306	0.506	0.012	0.020
C	0.203 TYP.		0.008 TYP.	
D	4.700	5.100	0.185	0.201
E	3.820	4.020	0.150	0.158
E1	5.800	6.200	0.228	0.244
e	1.270 TYP.		0.050 TYP.	
L	0.450	0.750	0.018	0.030
θ	0°	8°	0°	8°

RECOMMENDED SOLDERING FOOTPRINT, SOIC-8L

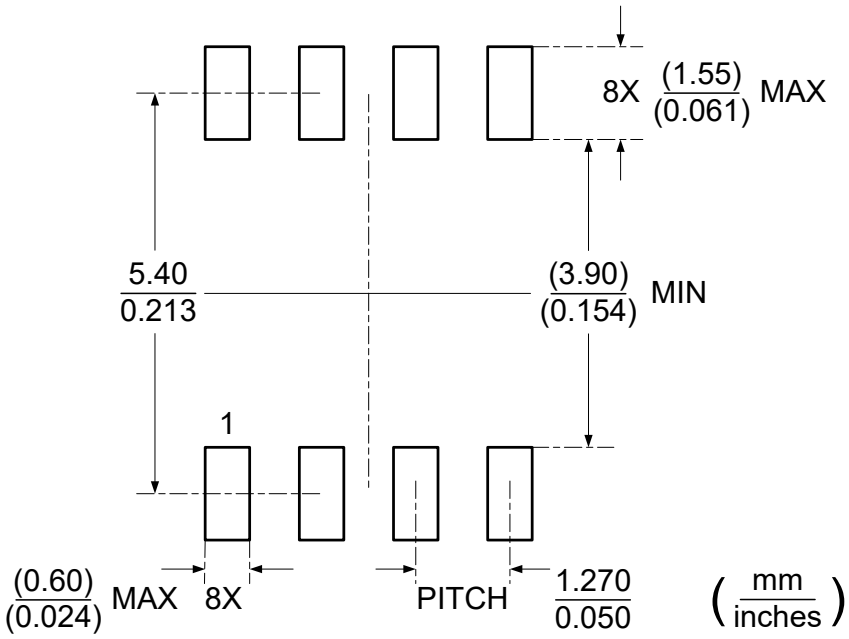

CAUTION: These devices are sensitive to electrostatic discharge; follow proper IC Handling Procedures.
Linearin and designs are registered trademarks of Linearin Technology Corporation.
© Copyright Linearin Technology Corporation. All Rights Reserved.
All other trademarks mentioned are the property of their respective owners.

Package Outlines (continued)

DIMENSIONS, MSOP-8L

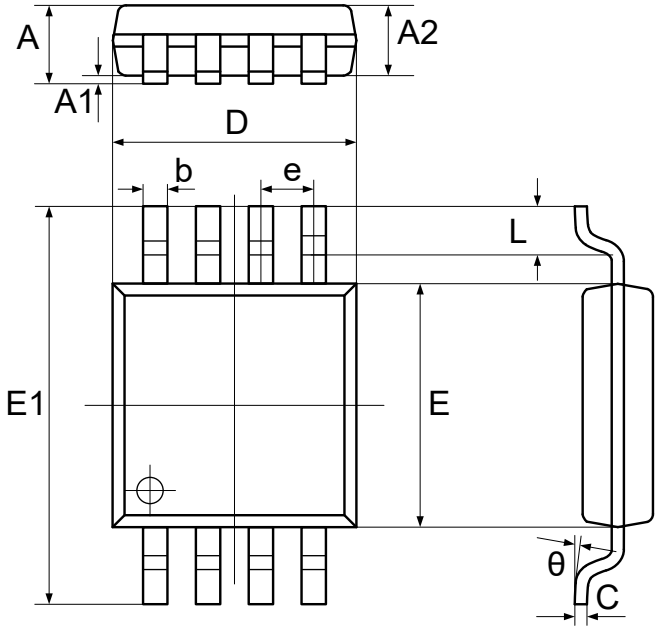

Symbol	Dimensions In Millimeters		Dimensions In Inches	
	Min	Max	Min	Max
A	0.800	1.100	0.031	0.043
A1	0.050	0.150	0.002	0.006
A2	0.750	0.950	0.030	0.037
b	0.290	0.380	0.011	0.015
C	0.150	0.200	0.006	0.008
D	2.900	3.100	0.114	0.122
E	2.900	3.100	0.114	0.122
E1	4.700	5.100	0.185	0.201
e	0.650 TYP.		0.026 TYP.	
L	0.400	0.700	0.016	0.028
θ	0°	8°	0°	8°

RECOMMENDED SOLDERING FOOTPRINT, MSOP-8L

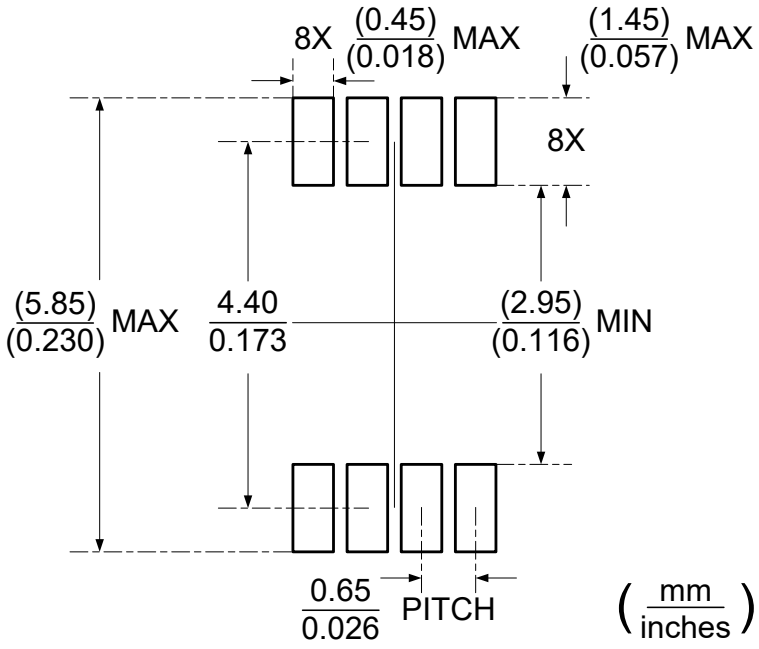

CAUTION: These devices are sensitive to electrostatic discharge; follow proper IC Handling Procedures.
Linearin and designs are registered trademarks of Linearin Technology Corporation.
© Copyright Linearin Technology Corporation. All Rights Reserved.
All other trademarks mentioned are the property of their respective owners.

Package Outlines (continued)

DIMENSIONS, TSSOP-8L

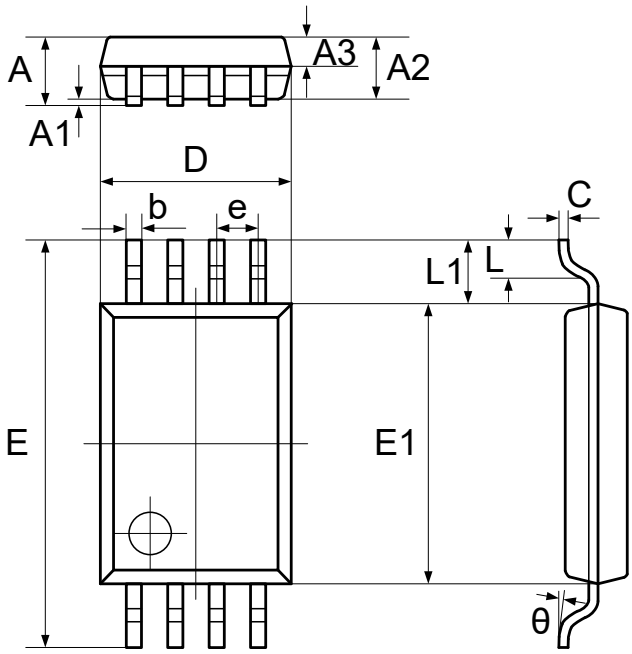

Symbol	Dimensions In Millimeters		Dimensions In Inches	
	Min	Max	Min	Max
A	-	1.200	-	0.047
A1	0.020	0.150	0.001	0.006
A2	0.900	1.050	0.035	0.041
A3	0.390	0.490	0.015	0.019
b	0.200	0.290	0.008	0.011
C	0.130	0.180	0.005	0.007
D	2.900	3.100	0.114	0.122
E	6.200	6.600	0.244	0.260
E1	4.300	4.500	0.169	0.177
e	0.650 typ.		0.026 typ.	
L1	1.000 ref.		0.039 ref.	
L	0.450	0.750	0.018	0.030
θ	0°	8°	0°	8°

RECOMMENDED SOLDERING FOOTPRINT, TSSOP-8L

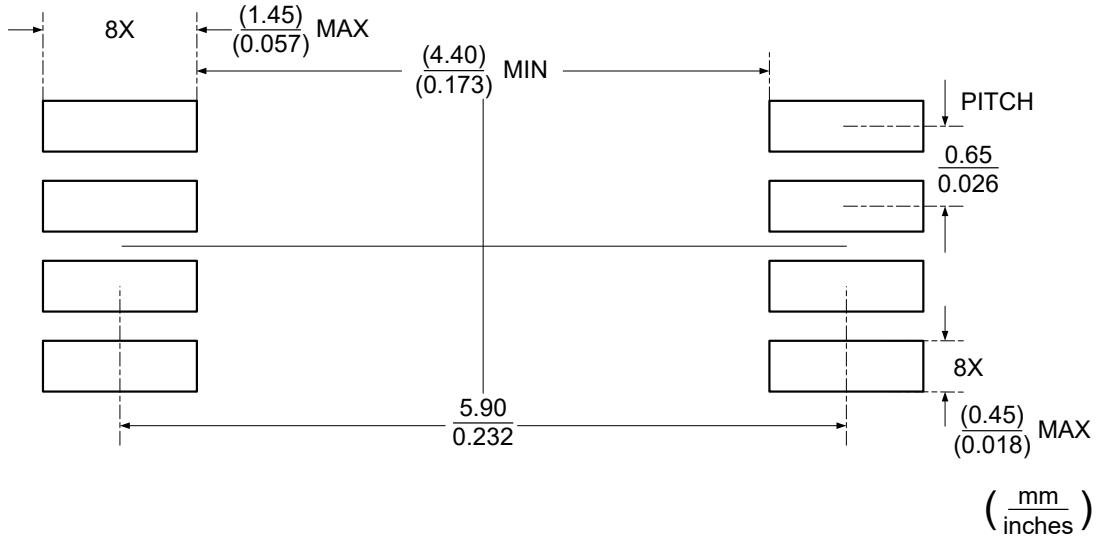

CAUTION: These devices are sensitive to electrostatic discharge; follow proper IC Handling Procedures.
Linearin and designs are registered trademarks of Linearin Technology Corporation.
© Copyright Linearin Technology Corporation. All Rights Reserved.
All other trademarks mentioned are the property of their respective owners.

Package Outlines (continued)

DIMENSIONS, QFN3x3-16L

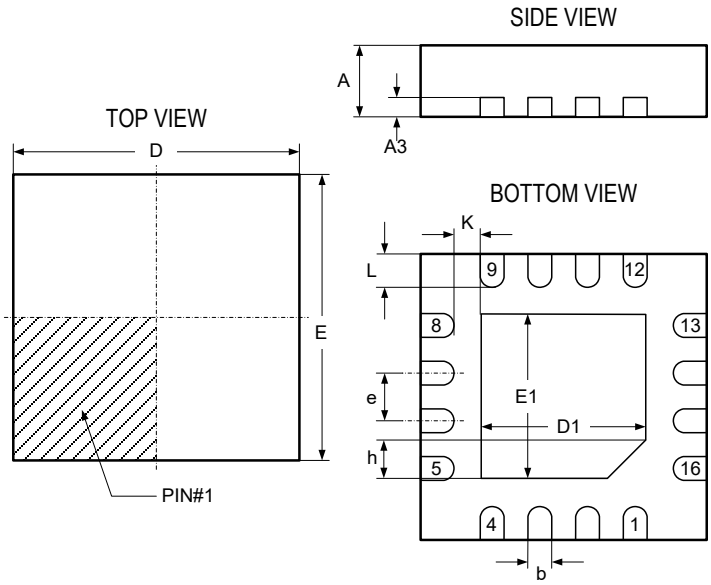

Symbol	Millimeters		
	Min.	Nom.	Max.
A	0.70	0.75	0.80
A3	0.210 REF.		
b	0.20	0.25	0.30
D	2.90	3.00	3.10
D1	1.60	1.65	1.70
E	2.90	3.00	3.10
E1	1.60	1.65	1.70
e	0.50 BSC.		
h	0.20	0.25	0.30
K	0.225	0.275	0.325
L	0.35	0.40	0.45

RECOMMENDED SOLDERING FOOTPRINT, QFN3x3-16L

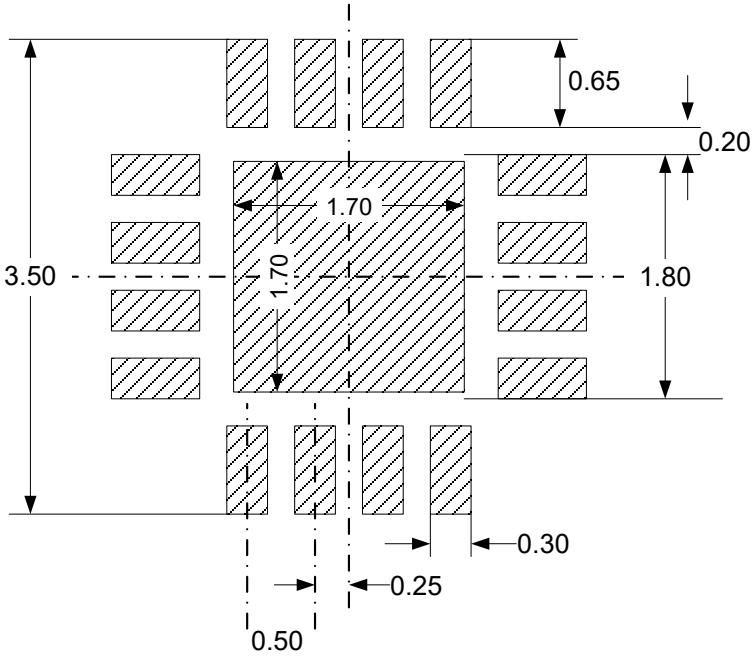

CAUTION: These devices are sensitive to electrostatic discharge; follow proper IC Handling Procedures.
Linearin and designs are registered trademarks of Linearin Technology Corporation.
© Copyright Linearin Technology Corporation. All Rights Reserved.
All other trademarks mentioned are the property of their respective owners.

Package Outlines (continued)

DIMENSIONS, SOIC-14L

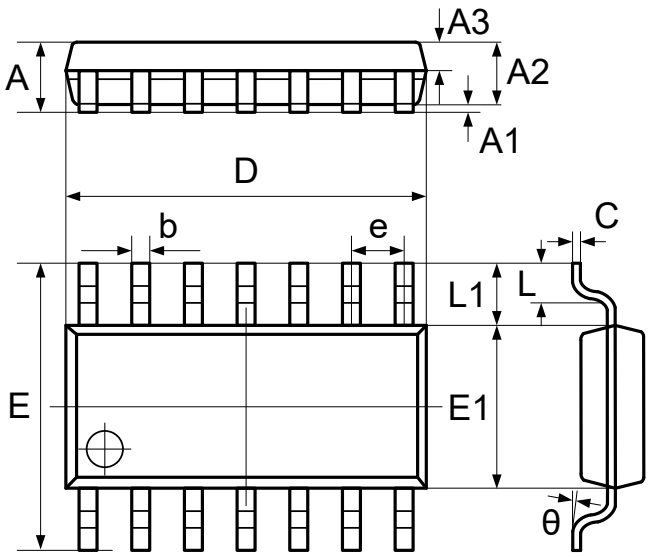

Symbol	Dimensions In Millimeters		Dimensions In Inches	
	Min	Max	Min	Max
A	1.450	1.850	0.057	0.073
A1	0.100	0.300	0.004	0.012
A2	1.350	1.550	0.053	0.061
A3	0.550	0.750	0.022	0.030
b	0.406 TYP.		0.016 TYP.	
C	0.203 TYP.		0.008 TYP.	
D	8.630	8.830	0.340	0.348
E	5.840	6.240	0.230	0.246
E1	3.850	4.050	0.152	0.159
e	1.270 TYP.		0.050 TYP.	
L1	1.040 REF.		0.041 REF.	
L	0.350	0.750	0.014	0.030
θ	2°	8°	2°	8°

RECOMMENDED SOLDERING FOOTPRINT, SOIC-14L

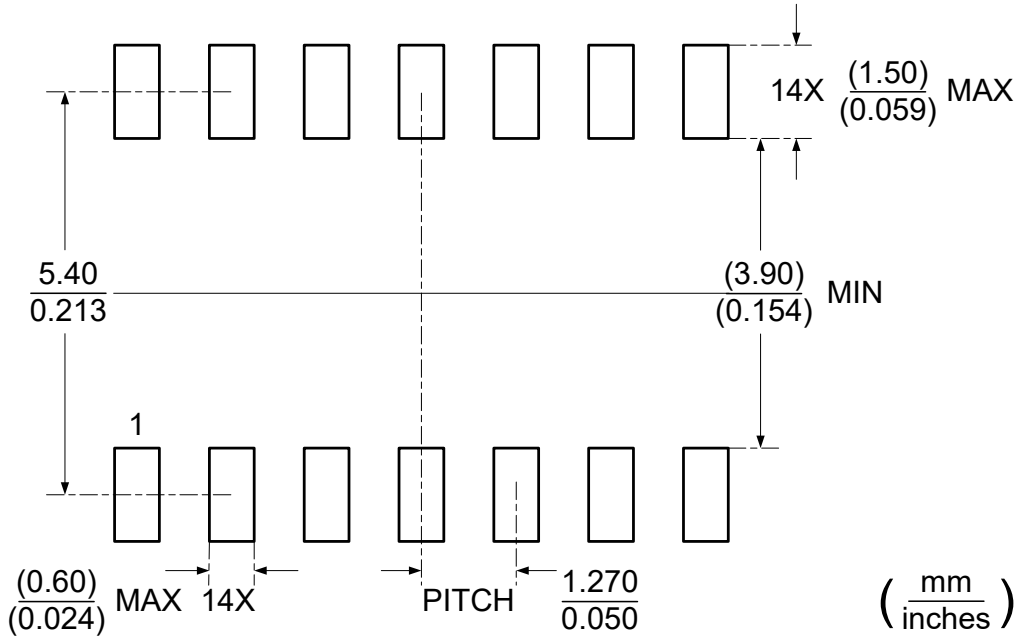

CAUTION: These devices are sensitive to electrostatic discharge; follow proper IC Handling Procedures.
Linearin and designs are registered trademarks of Linearin Technology Corporation.
© Copyright Linearin Technology Corporation. All Rights Reserved.
All other trademarks mentioned are the property of their respective owners.

Package Outlines (continued)

DIMENSIONS, TSSOP-14L

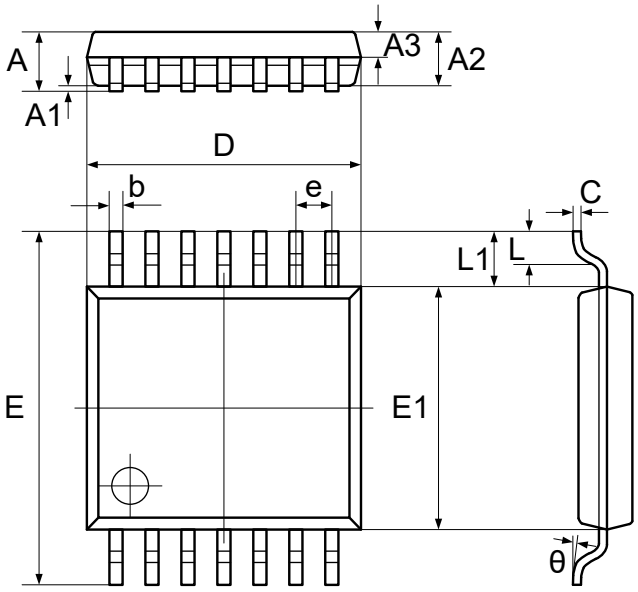

Symbol	Dimensions In Millimeters		Dimensions In Inches	
	Min	Max	Min	Max
A	-	1.200	-	0.047
A1	0.050	0.150	0.002	0.006
A2	0.900	1.050	0.035	0.041
A3	0.390	0.490	0.015	0.019
b	0.200	0.290	0.008	0.011
C	0.130	0.180	0.005	0.007
D	4.860	5.060	0.191	0.199
E	6.200	6.600	0.244	0.260
E1	4.300	4.500	0.169	0.177
e	0.650 TYP.		0.026 TYP.	
L1	1.000 REF.		0.039 REF.	
L	0.450	0.750	0.018	0.030
θ	0°	8°	0°	8°

RECOMMENDED SOLDERING FOOTPRINT, TSSOP-14L

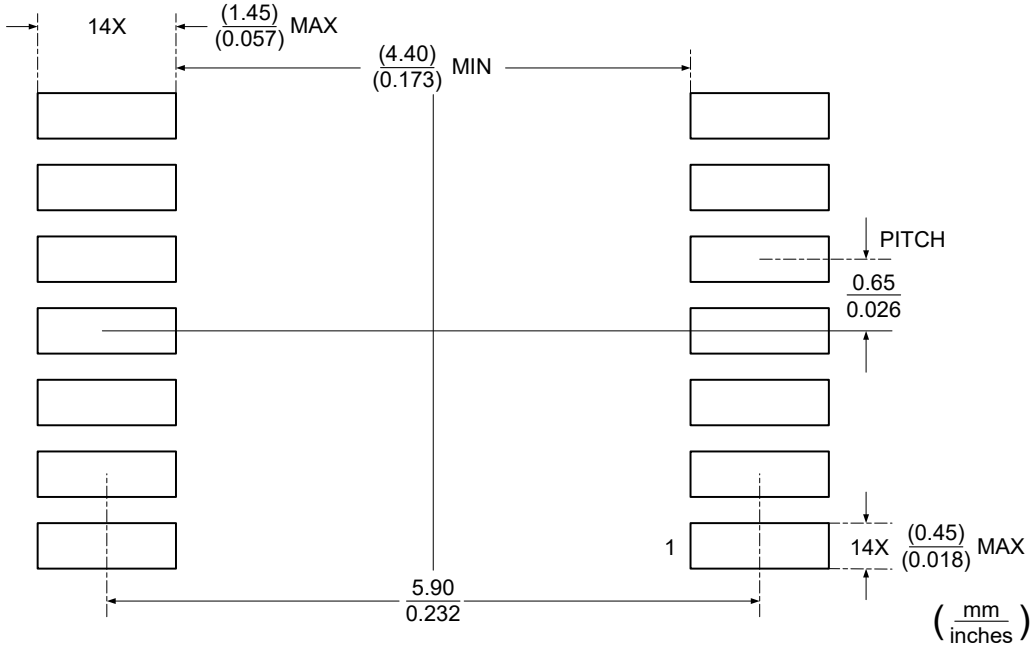

CAUTION: These devices are sensitive to electrostatic discharge; follow proper IC Handling Procedures.
Linearin and designs are registered trademarks of Linearin Technology Corporation.
© Copyright Linearin Technology Corporation. All Rights Reserved.
All other trademarks mentioned are the property of their respective owners.

Important Notice

Linearin is a global fabless semiconductor company specializing in advanced high-performance high-quality analog/mixed-signal IC products and sensor solutions. The company is devoted to the innovation of high performance, analog-intensive sensor front-end products and modular sensor solutions, applied in multi-market of medical & wearable devices, smart home, sensing of IoT, and intelligent industrial & smart factory (industrie 4.0). Linearin's product families include widely-used standard catalog products, solution-based application specific standard products (ASSPs) and sensor modules that help customers achieve faster time-to-market products. Go to http://www.linearin.com for a complete list of Linearin product families.

For additional product information, or full datasheet, please contact with the Linearin's Sales Department or Representatives.

CAUTION: These devices are sensitive to electrostatic discharge; follow proper IC Handling Procedures.
Linearin and designs are registered trademarks of Linearin Technology Corporation.
© Copyright Linearin Technology Corporation. All Rights Reserved.
All other trademarks mentioned are the property of their respective owners.