General Description

The LTC883x family of single-, dual-, and quad-channel operational amplifiers represents a new generation of general-purpose, low-power op-amps. Featuring rail-to-rail input and output (RRIO) swings, low quiescent current (typical 700µA) combined with a wide bandwidth (9MHz) and very low noise (12nV/Hz at 1kHz) makes this family very attractive for a variety of battery-powered applications that require a good balance between cost and performance, such as audio outputs, motor phase current sensing, photodiode amplification, barcode scanners and white goods. The low input bias current supports these amplifiers to be used in applications withmega-ohm source impedances.

The robust design of the LTC883x amplifiers provides ease-of-use to the circuit designer: unity-gain stability with capacitive loads of up to 500pF, integrated RF/EMI rejection filter, no phase reversal in overdrive conditions, and high electro-static discharge (ESD) protection (±4kV HBM). The LTC883x amplifiers are optimized for operation at voltages as low as +2.0V (±1.0V) and up to +5.5V (±2.75V) over the extended temperature range of -40℃ to +125℃.

The LTC8831 (single) is available in both SOT23-5L and SC70-5L packages. The LTC8832 (dual) is offered in SOIC-8L, DFN2x2-8L, MSOP-8L and TSSOP-8Lpackages. The quad -channel LTC8834 is offered in both SOIC-14L and TSSOP-14L packages.

Features and Benefits

- Wide Unity-Gain Bandwidth: 9 MHz
- High Slew Rate: 8.5 V/µs
- Fast Settling: 0.3 µs to 0.1%
- Low Noise: 12 nV/√Hz at 1 kHz
- Low Input Offset Voltage: ±0.7 mV
- Single 2.0 V to 5.5 V Power Supply Range
- Rail-to-Rail Input and Output
- Internal RF/EMI Filter
- Low Supply Current: 700 µA at 5V Supply Per Amplifier
- Extended Temperature Range: −40℃ to +125℃

Applications

- Motor Phase Current Sense
- Audio Outputs
- Photodiode Amplification
- Battery-Powered Instruments:
  - Consumer, Industrial, Medical, Notebooks
- Sensor Signal Conditioning:
  - Sensor Interfaces, Loop-Powered, Active Filters

Pin Configurations (Top View)

LTC8831
SOT23-5L / SC70-5L

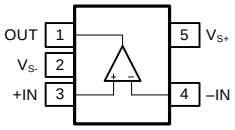

LTC8832
DFN2x2-8L

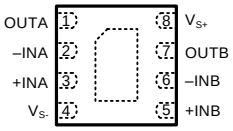

LTC8832
SOIC-8L / MSOP-8L / TSSOP-8L

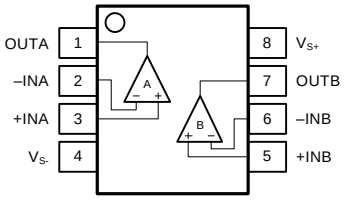

LTC8834
SOIC-14L / TSSOP-14L

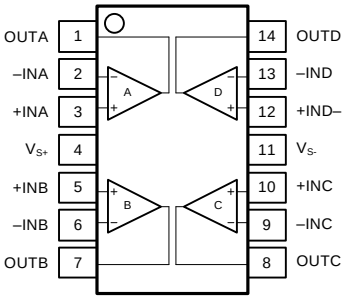

CAUTION: These devices are sensitive to electrostatic discharge; follow proper IC Handling Procedures.
Linearin and designs are registered trademarks of Linearin Technology Corporation.
© Copyright Linearin Technology Corporation. All Rights Reserved.
All other trademarks mentioned are the property of their respective owners.

Pin Description

Symbol	Description
–IN	Inverting input of the amplifier. The voltage range is from (V_{S-} – 0.1V) to (V_{S+} + 0.1V).
+IN	Non-inverting input of the amplifier. This pin has the same voltage range as –IN.
V_{S+}	Positive power supply.
V_{S-}	Negative power supply.
OUT	Amplifier output.

Ordering Information

Type Number	Package Name	Package Quantity	Marking Code (1)
LTC8831XT5/R6	SOT23-5L	Tape and Reel, 3 000	AH1
LTC8831XC5/R6	SC70-5L	Tape and Reel, 3 000	AH1
LTC8832XS8/R8	SOIC-8L	Tape and Reel, 4 000	AH2 X, C32
LTC8832XF8/R6	DFN2x2-8L	Tape and Reel, 3 000	AH2x
LTC8832XV8/R6	MSOP-8L	Tape and Reel, 3 000	AH2x, C32
LTC8832XT8/R8	TSSOP-8L	Tape and Reel, 4 000	AH2T
LTC8834XS14/R5	SOIC-14L	Tape and Reel, 2 500	AH4 X,C34
LTC8834XT14/R6	TSSOP-14L	Tape and Reel, 3 000	AH4 X

(1) There may be multiple device markings, a varied marking character of "x", or additional marking, which relates to the logo, the lot trace code information, or the environmental category on the device.

Limiting Value

In accordance with the Absolute Maximum Rating System (IEC 60134).

Parameter	Absolute Maximum Rating
Supply Voltage, V_{S+} to V_{S-}	10.0 V
Signal Input Terminals: Voltage, Current	V_{S-} – 0.5 V to V_{S+} + 0.5 V, ±10 mA
Output Short-Circuit	Continuous
Storage Temperature Range, T_{stg}	–65 ℃ to +150 ℃
Junction Temperature, T_J	150 ℃
Lead Temperature Range (Soldering 10 sec)	260 ℃

ESD Rating

Parameter	Item	Value	Unit
Electrostatic Discharge Voltage	Human body model (HBM), per ANSI/ESDA/JEDEC JS-001	±4 000	V
	Charged device model (CDM), per ANSI/ESDA/JEDEC JS-002	±2 000	

CAUTION: These devices are sensitive to electrostatic discharge; follow proper IC Handling Procedures.
Linearin and designs are registered trademarks of Linearin Technology Corporation.
© Copyright Linearin Technology Corporation. All Rights Reserved.
All other trademarks mentioned are the property of their respective owners.

Electrical Characteristics

V_S = 5.0V, T_A = +25°C, V_{CM} = V_S/2, V_O = V_S/2, and R_L = 10kΩ connected to V_S/2, unless otherwise noted. Boldface limits apply over the specified temperature range, T_A = −40 to +125 °C.

Symbol	Parameter	Conditions	Min.	Typ.	Max.	Unit
OFFSET VOLTAGE						
V_{OS}	Input offset voltage			±0.7	±3.5	mV
V_{OS} TC	Offset voltage drift	T_A = −40 to +125 °C		±2		µV/°C
PSRR	Power supply rejection ratio	V_S = 2.0 to 5.5 V, V_{CM} < V_{S+} − 2V	90	106		dB
		T_A = −40 to +125 °C	77			
INPUT BIAS CURRENT						
I_B	Input bias current			1		pA
		T_A = +85 °C		150		
		T_A = +125 °C		500		
I_{OS}	Input offset current			1		pA
NOISE						
V_n	Input voltage noise	f = 0.1 to 10 Hz		4		$µV_{P-P}$
e_n	Input voltage noise density	f = 1 kHz		12		nV/√Hz
I_n	Input current noise density	f = 1 kHz		5		fA/√Hz
INPUT VOLTAGE						
V_{CM}	Common-mode voltage range		V_{S-}−0.1		V_{S+}+0.1	V
CMRR	Common-mode rejection ratio	V_{CM} = −0.1 to 5.1 V	70	82		dB
		V_{CM} = 0 to 4.9 V, T_A = −40 to +125 °C	67			
		V_S = 2.0 V, V_{CM} = −0.1 to 2.1 V	66	77		
		V_{CM} = 0 to 1.8 V, T_A = −40 to +125 °C	62			
INPUT IMPEDANCE						
C_{IN}	Input capacitance	Differential		2.0		pF
		Common mode		3.5		
OPEN-LOOP GAIN						
A_{VOL}	Open-loop voltage gain	R_L = 10 kΩ, V_O = 0.05 to 3.5 V	93	102		dB
		T_A = −40 to +125 °C	84			
		R_L = 600 Ω, V_O = 0.15 to 3.5 V	78	87		
		T_A = −40 to +125 °C	70			
FREQUENCY RESPONSE						
GBW	Gain bandwidth product			9		MHz
SR	Slew rate	G = +1, C_L = 100 pF, V_O = 1.5 to 3.5 V		8.5		V/µs
THD+N	Total harmonic distortion + noise	G = +1, f = 1 kHz, V_O = 0.5 V_{RMS}		0.0008		%
t_S	Settling time	To 0.1%, G = +1, 1V step		0.3		µs
		To 0.01%, G = +1, 1V step		0.4		
t_{OR}	Overload recovery time	V_{IN} * Gain > V_S		0.3		µs

CAUTION: These devices are sensitive to electrostatic discharge; follow proper IC Handling Procedures.
Linearin and designs are registered trademarks of Linearin Technology Corporation.
© Copyright Linearin Technology Corporation. All Rights Reserved.
All other trademarks mentioned are the property of their respective owners.

Electrical Characteristics (continued)

V_S = 5.0V, T_A = +25°C, V_{CM} = V_S/2, V_O = V_S/2, and R_L = 10kΩ connected to V_S/2, unless otherwise noted. Boldface limits apply over the specified temperature range, T_A = −40 to +125 °C.

Symbol	Parameter	Conditions	Min.	Typ.	Max.	Unit
OUTPUT						
V_{OH}	High output voltage swing	R_L = 10 kΩ	V_{S+}−14	V_{S+}−10		mV
		R_L = 600 Ω	V_{S+}−200	V_{S+}−140		
V_{OL}	Low output voltage swing	R_L = 10 kΩ		V_{S-}+7	V_{S-}+10	mV
		R_L = 600 Ω		V_{S-}+100	V_{S-}+150	
I_{SC}	Short-circuit current			±70		mA
POWER SUPPLY						
V_S	Operating supply voltage	T_A = −40 to +125 °C	2.0		5.5	V
I_Q	Quiescent current (per amplifier)	V_S = 2.0 V		585	695	µA
		V_S = 5.0 V		700	830	
THERMAL CHARACTERISTICS						
T_A	Operating temperature range		−40		+125	°C
θ_{JA}	Package Thermal Resistance	SC70-5L		333		°C/W
		SOT23-5L		190		
		DFN2x2-8L		94		
		MSOP-8L		201		
		TSSOP-8L		160		
		SOIC-8L		125		
		TSSOP-14L		112		
		SOIC-14L		115		

CAUTION: These devices are sensitive to electrostatic discharge; follow proper IC Handling Procedures.
Linearin and designs are registered trademarks of Linearin Technology Corporation.
© Copyright Linearin Technology Corporation. All Rights Reserved.
All other trademarks mentioned are the property of their respective owners.

Typical Performance Characteristics

At T_A = +25°C, V_{CM} = V_S/2, and R_L = 10kΩ connected to V_S/2, unless otherwise noted.

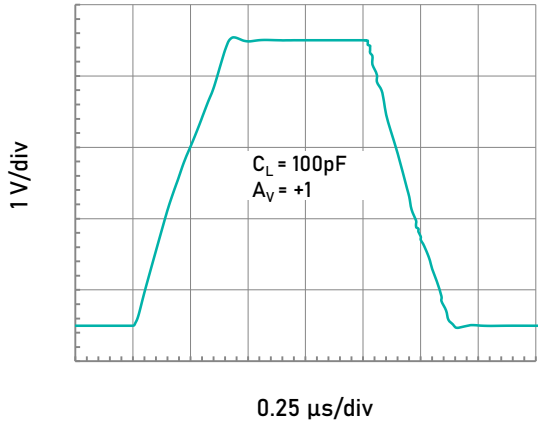

Large Signal Step Response.

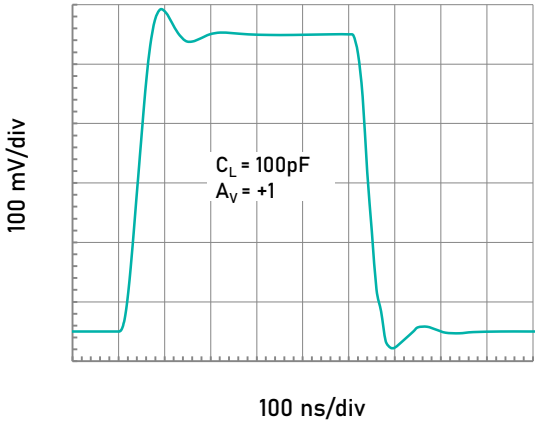

Small Signal Step Response (500 mV).

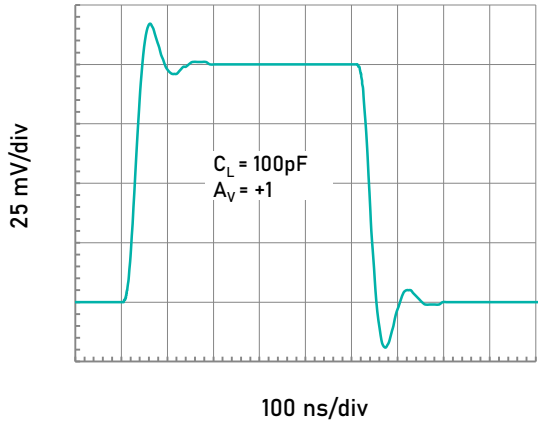

Small Signal Step Response (500 mV).

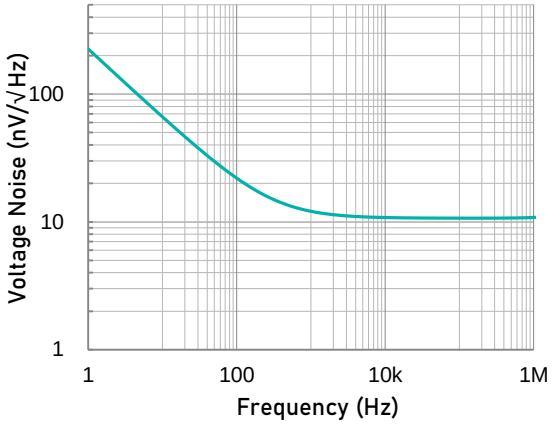

Input Voltage Noise Spectral Density as a function of Frequency.

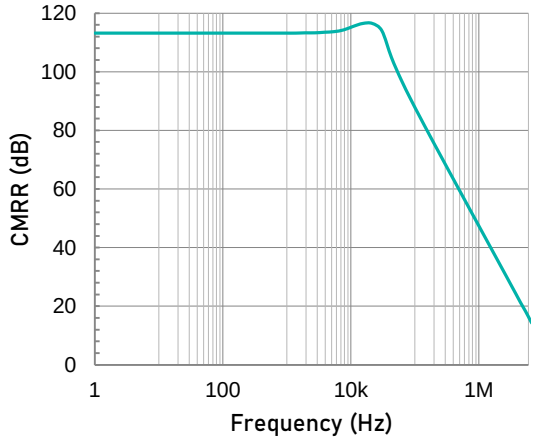

Common-mode Rejection Ratio as a function of Frequency.

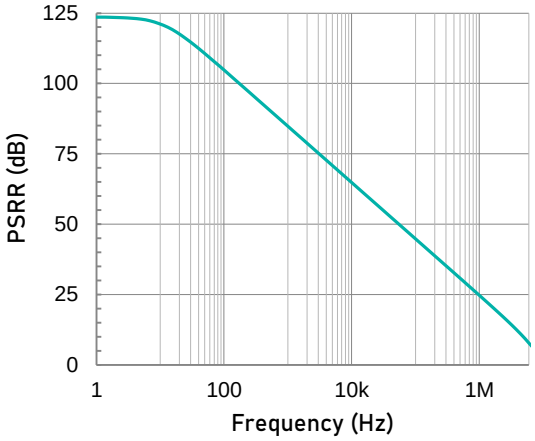

Power Supply Rejection Ratio as a function of Frequency.

CAUTION: These devices are sensitive to electrostatic discharge; follow proper IC Handling Procedures.
Linearin and designs are registered trademarks of Linearin Technology Corporation.
© Copyright Linearin Technology Corporation. All Rights Reserved.
All other trademarks mentioned are the property of their respective owners.

Typical Performance Characteristics (continued)

At T_A = +25°C, V_{CM} = V_S/2, and R_L = 10kΩ connected to V_S/2, unless otherwise noted.

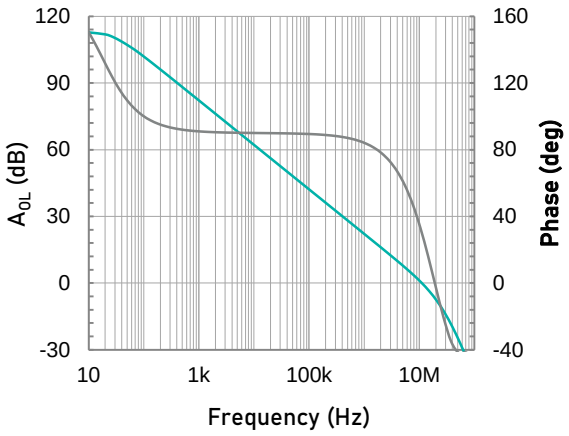

Open-loop Gain and Phase as a function of Frequency.

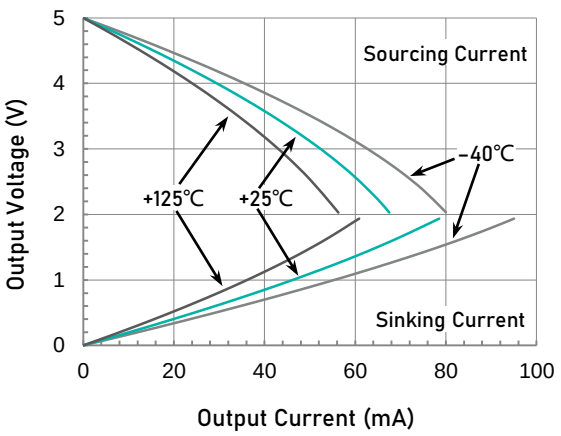

Output Voltage Swing as a function of Output Current.

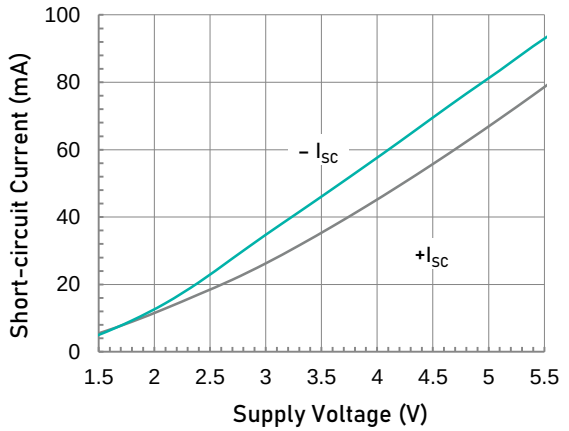

Short-circuit Current as a function of Supply Voltage.

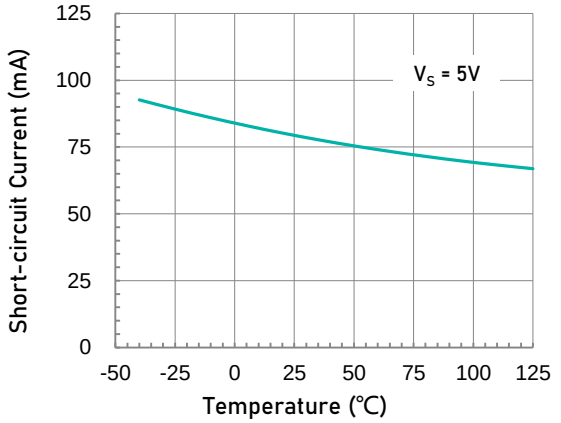

Short-circuit Current as a function of Temperature.

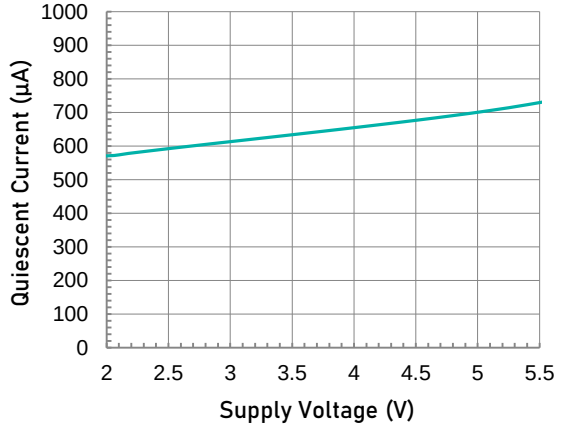

Quiescent Current as a function of Supply Voltage.

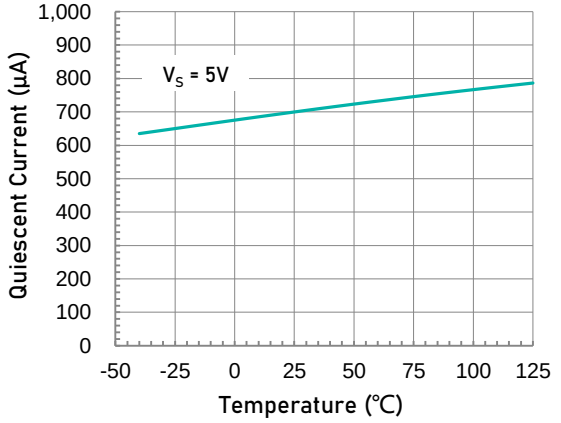

Quiescent Current as a function of Temperature.

CAUTION: These devices are sensitive to electrostatic discharge; follow proper IC Handling Procedures.
Linearin and designs are registered trademarks of Linearin Technology Corporation.
© Copyright Linearin Technology Corporation. All Rights Reserved.
All other trademarks mentioned are the property of their respective owners.

Application Notes

The LTC883x is a family of low-power, rail-to-rail input and output operational amplifiers specifically designed for portable applications. These devices operate from 2.0 V to 5.5 V at the temperature range of –40 °C to +125 °C, are unity-gain stable, and suitable for a wide range of general-purpose applications. The class AB output stage is capable of driving ≤ 10-kΩ loads connected to any point between V_{S+} and ground. The input common-mode voltage range includes both rails, and allows the LTC883x family to be used in virtually any single-supply application. Rail-to-rail input and output swing significantly increases dynamic range, especially in low-supply applications, and makes them ideal for driving sampling analog-to-digital converters (ADCs).

The LTC883x features 9-MHz bandwidth and 8.5-V/µs slew rate with only 700-µA supply current per amplifier, providing good ac performance at very low power consumption. DC applications are also well served with a low input noise voltage of 12-nV/√Hz at 1-kHz, low input bias current, and an input offset voltage of 0.7-mV typically. The typical offset voltage drift is ± 2-µV/°C, over the full temperature range the input offset voltage changes only 100-µV (0.7-mV to 0.8-mV).

OPERATING VOLTAGE

The LTC883x family is optimized for operation at voltages as low as +2.0 V (±1.0 V) and up to +5.5 V (±2.75 V). In addition, many specifications apply from –40 °C to +125 °C. Parameters that vary significantly with operating voltages or temperature are illustrated in the Typical Characteristics graphs.

NOTE: Supply voltages (V_{S+} to V_{S-}) higher than +10 V can permanently damage the device.

RAIL-TO-RAIL INPUT

The input common-mode voltage range of the LTC883x series extends 100-mV beyond the negative and positive supply rails. This performance is achieved with a complementary input stage: an N-channel input differential pair in parallel with a P-channel differential pair. The N-channel pair is active for input voltages close to the positive rail, typically V_{S+}–1.4 V to the positive supply, whereas the P-channel pair is active for inputs from 100-mV below the negative supply to approximately V_{S+}–1.4 V. There is a small transition region, typically V_{S+}–1.2 V to V_{S+}–1 V, in which both pairs are on. This 200-mV transition region can vary up to 200-mV with process variation. Thus, the transition region (both stages on) can range from V_{S+}–1.4 V to V_{S+}–1.2 V on the low end, up to V_{S+}–1 V to V_{S+}–0.8 V on the high end. Within this transition region, PSRR, CMRR, offset voltage, offset drift, and THD can be degraded compared to device operation outside this region.

The typical input bias current of the LTC883x during normal operation is approximately 1-pA. In overdriven conditions, the bias current can increase significantly. The most common cause of an overdriven condition occurs when the operational amplifier is outside of the linear range of operation. When the output of the operational amplifier is driven to one of the supply rails, the feedback loop requirements cannot be satisfied and a differential input voltage develops across the input pins. This differential input voltage results in activation of parasitic diodes inside the front-end input chopping switches that combine with electromagnetic interference (EMI) filter resistors to create the equivalent circuit. Notice that the input bias current remains within specification in the linear region.

INPUT EMI FILTER AND CLAMP CIRCUIT

Figure 1 shows the input EMI filter and clamp circuit. The LTC883x op-amps have internal ESD protection diodes (D1, D2, D3, and D4) that are connected between the inputs and each supply rail. These diodes protect the input transistors in the event of electrostatic discharge and are reverse biased during normal operation. This protection scheme allows voltages as high as approximately 500-mV beyond the rails to be applied at the input of either terminal without causing permanent damage. These ESD protection current-steering diodes also provide in-circuit, input overdrive protection, as long as the current is limited to 20-mA as stated in the Absolute Maximum Ratings.

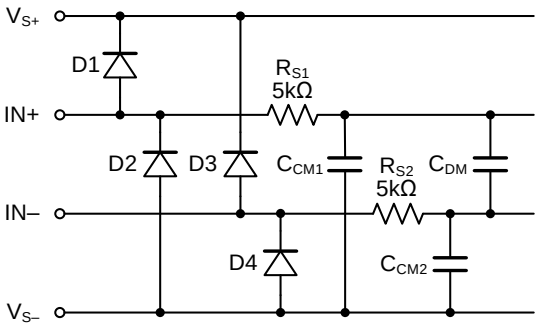

Figure 1. Input EMI Filter and Clamp Circuit

Operational amplifiers vary in susceptibility to EMI. If conducted EMI enters the operational amplifier, the dc offset at the amplifier output can shift from its nominal value when EMI is present. This shift is a result of signal rectification associated with the internal semiconductor junctions. Although all operational amplifier pin functions can be affected by EMI, the input pins are likely to be the most susceptible. The EMI filter of the LTC883x family is composed of two 5-kΩ input series resistors (R_{S1} and R_{S2}), two common-mode capacitors (C_{CM1} and C_{CM2}),

CAUTION: These devices are sensitive to electrostatic discharge; follow proper IC Handling Procedures.
Linearin and designs are registered trademarks of Linearin Technology Corporation.
© Copyright Linearin Technology Corporation. All Rights Reserved.
All other trademarks mentioned are the property of their respective owners.

Application Notes (continued)

and a differential capacitor (C_{DM}). These RC networks set the –3 dB low-pass cutoff frequencies at 35-MHz for common-mode signals, and at 22-MHz for differential signals.

RAIL-TO-RAIL OUTPUT

Designed as a micro-power, low-noise operational amplifier, the LTC883x delivers a robust output drive capability. A class AB output stage with common-source transistors is used to achieve full rail-to-rail output swing capability. For resistive loads up to 100-kΩ, the output swings typically to within 5-mV of either supply rail regardless of the power-supply voltage applied. Different load conditions change the ability of the amplifier to swing close to the rails. For resistive loads up to 600-Ω, the output swings typically to within 140-mV of the positive supply rail and within 100-mV of the negative supply rail.

CAPACITIVE LOAD AND STABILITY

The LTC883x family can safely drive capacitive loads of up to 500-pF in any configuration. As with most amplifiers, driving larger capacitive loads than specified may cause excessive overshoot and ringing, or even oscillation. A heavy capacitive load reduces the phase margin and causes the amplifier frequency response to peak. Peaking corresponds to over-shooting or ringing in the time domain. Therefore, it is recommended that external compensation be used if the LTC883x op-amps must drive a load exceeding 500-pF. This compensation is particularly important in the unity-gain configuration, which is the worst case for stability.

A quick and easy way to stabilize the op-amp for capacitive load drive is by adding a series resistor, R_{ISO}, between the amplifier output terminal and the load capacitance, as shown in Figure 2. R_{ISO} isolates the amplifier output and feedback network from the capacitive load. The bigger the R_{ISO} resistor value, the more stable V_{OUT} will be. Note that this method results in a loss of gain accuracy because R_{ISO} forms a voltage divider with the R_L.

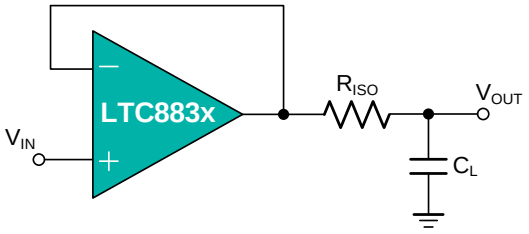

Figure 2. Indirectly Driving Heavy Capacitive Load

An improvement circuit is shown in Figure 3. It provides DC accuracy as well as AC stability. The R_F provides the DC accuracy by connecting the inverting signal with the output.

The C_F and R_{ISO} serve to counteract the loss of phase margin by feeding the high frequency component of the output signal back to the amplifier's inverting input, thereby preserving phase margin in the overall feedback loop.

For no-buffer configuration, there are two others ways to increase the phase margin: (a) by increasing the amplifier's gain, or (b) by placing a capacitor in parallel with the feedback resistor to counteract the parasitic capacitance associated with inverting node.

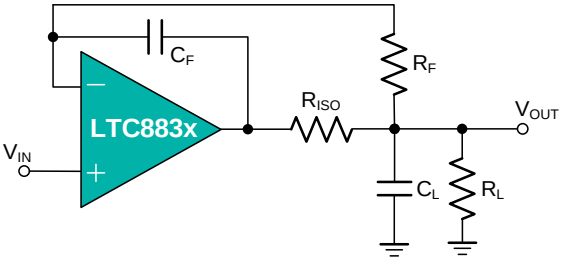

Figure 3. Indirectly Driving Heavy Capacitive Load with DC Accuracy

OVERLOAD RECOVERY

Overload recovery is defined as the time required for the operational amplifier output to recover from a saturated state to a linear state. The output devices of the operational amplifier enter a saturation region when the output voltage exceeds the rated operating voltage, either because of the high input voltage or the high gain. After the device enters the saturation region, the charge carriers in the output devices require time to return back to the linear state. After the charge carriers return back to the linear state, the device begins to slew at the specified slew rate. Thus, the propagation delay in case of an overload condition is the sum of the overload recovery time and the slew time. The overload recovery time for the LTC883x family is approximately 0.3-µs.

EMI REJECTION RATIO

Circuit performance is often adversely affected by high frequency EMI. When the signal strength is low and transmission lines are long, an op-amp must accurately amplify the input signals. However, all op-amp pins — the non-inverting input, inverting input, positive supply, negative supply, and output pins — are susceptible to EMI signals. These high frequency signals are coupled into an op-amp by various means, such as conduction, near field radiation, or far field radiation. For example, wires and printed circuit board (PCB) traces can act as antennas and pick up high frequency EMI signals.

Amplifiers do not amplify EMI or RF signals due to their relatively low bandwidth. However, due to the

CAUTION: These devices are sensitive to electrostatic discharge; follow proper IC Handling Procedures.
Linearin and designs are registered trademarks of Linearin Technology Corporation.
© Copyright Linearin Technology Corporation. All Rights Reserved.
All other trademarks mentioned are the property of their respective owners.

Application Notes (continued)

nonlinearities of the input devices, op-amps can rectify these out of band signals. When these high frequency signals are rectified, they appear as a dc offset at the output.

The LTC883x op-amps have integrated EMI filters at their input stage. A mathematical method of measuring EMIRR is defined as follows:

$$EMIRR = 20 \log (V_{IN_PEAK} / \Delta V_{OS})$$

INPUT-TO-OUTPUT COUPLING

To minimize capacitive coupling, the input and output signal traces should not be parallel. This helps reduce unwanted positive feedback.

MAXIMIZING PERFORMANCE THROUGH PROPER LAYOUT

To achieve the maximum performance of the extremely high input impedance and low offset voltage of the LTC883x op-amps, care is needed in laying out the circuit board. The PCB surface must remain clean and free of moisture to avoid leakage currents between adjacent traces. Surface coating of the circuit board reduces surface moisture and provides a humidity barrier, reducing parasitic resistance on the board. The use of guard rings around the amplifier inputs further reduces leakage currents. Figure 4 shows proper guard ring configuration and the top view of a surface-mount layout. The guard ring does not need to be a specific width, but it should form a continuous loop around both inputs. By setting the guard ring voltage equal to the voltage at the non-inverting input, parasitic capacitance is minimized as well. For further reduction of leakage currents, components can be mounted to the PCB using Teflon standoff insulators.

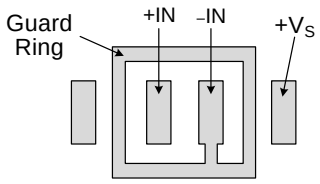

Figure 4. Use a guard ring around sensitive pins

Other potential sources of offset error are thermoelectric voltages on the circuit board. This voltage, also called Seebeck voltage, occurs at the junction of two dissimilar metals and is proportional to the temperature of the junction. The most common metallic junctions on a circuit board are solder-to-board trace and solder-to-component lead. If the temperature of the PCB at one end of the component is different from the temperature at the other end, the resulting Seebeck voltages are not equal, resulting in a thermal voltage error.

This thermocouple error can be reduced by using dummy components to match the thermoelectric error source. Placing the dummy component as close as possible to its partner ensures both Seebeck voltages are equal, thus canceling the thermocouple error. Maintaining a constant ambient temperature on the circuit board further reduces this error. The use of a ground plane helps distribute heat throughout the board and reduces EMI noise pickup.

CAUTION: These devices are sensitive to electrostatic discharge; follow proper IC Handling Procedures.
Linearin and designs are registered trademarks of Linearin Technology Corporation.
© Copyright Linearin Technology Corporation. All Rights Reserved.
All other trademarks mentioned are the property of their respective owners.

Typical Application Circuits

ACTIVE FILTER

The LTC883x family is well-suited for active filter applications that require a wide bandwidth, fast slew rate, low-noise, single-supply operational amplifier. Figure 5 shows a 500-kHz, second-order, low-pass filter using the multiple-feedback (MFB) topology. The components have been selected to provide a maximally-flat Butterworth response. Beyond the cut-off frequency, roll-off is –40 dB/dec. The Butterworth response is ideal for applications that require predictable gain characteristics, such as the anti-aliasing filter used in front of an ADC.

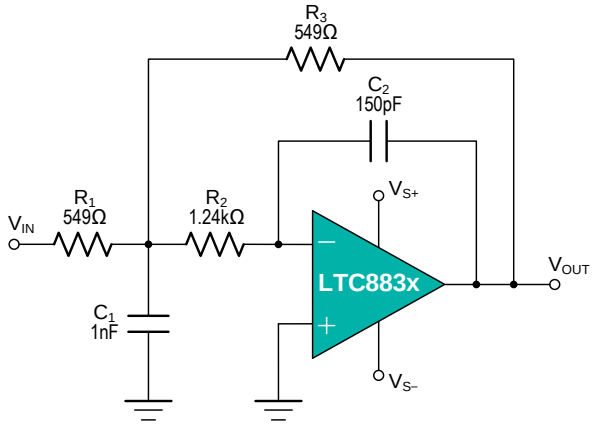

Figure 5. Second-Order, Butterworth, 500-kHz Low-Pass Filter

One point to observe when considering the MFB filter is that the output is inverted, relative to the input. If this inversion is not required, or not desired, a non-inverting output can be achieved through one of these options:

1. adding an inverting amplifier;
2. adding an additional second-order MFB stage; or
3. using a non-inverting filter topology, such as the Sallen-Key (shown in Figure 6).

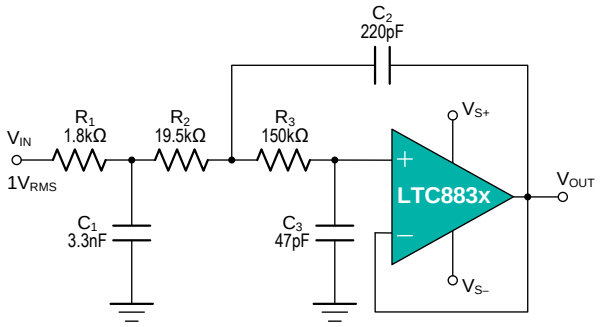

Figure 6. Configured as a Three-Pole, 20-kHz, Sallen-Key Filter

MOTOR PHASE CURRENT SENSING

The current sensing amplification shown in Figure 7 has a slew rate of $2\pi fV_{PP}$ for the output of sine wave signal, and has a slew rate of $2fV_{PP}$ for the output of triangular wave signal. In most of motor control systems, the PWM frequency is at 10 kHz to 20 kHz, and one cycle time is 100 µs for a 10 kHz of PWM frequency. In current shunt monitoring for a motor phase, the phase current is converted to a phase voltage signal for ADC sampling. This sampling voltage signal must be settled before entering the ADC. As the Figure 7 shown, the total settling time of a current shunt monitor circuit includes: the rising edge delay time (t_{SR}) due to the op-amp's slew rate, and the measurement settling time (t_{SET}). For a 2-shunt solution of motor phase current sensing, if the minimum duty cycle of the PWM is defined at 5%, and the t_{SR} is required at 20% of a total time window for a phase current monitoring, in case of a 3.3 V motor control system (3.3 V MCU with 12-bit ADC), the op-amp's slew rate should be more than:

$$3.3V / (100\mu s \times 5\% \times 20\%) = 3.3\ V/\mu s$$

At the same time, the op-amp's bandwidth should be much greater than the PWM frequency, like 10 time at least.

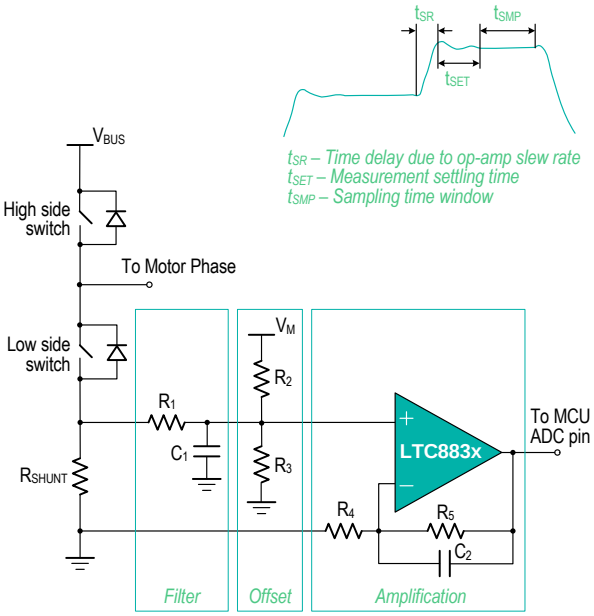

Figure 7. Current Shunt Monitor Circuit

DIFFERENTIAL AMPLIFIER

The circuit shown in Figure 8 performs the difference function. If the resistors ratios are equal $R_4/R_3 = R_2/R_1$, then:

$$V_{OUT} = (V_p - V_n) \times R_2/R_1 + V_{REF}$$

CAUTION: These devices are sensitive to electrostatic discharge; follow proper IC Handling Procedures.
Linearin and designs are registered trademarks of Linearin Technology Corporation.
© Copyright Linearin Technology Corporation. All Rights Reserved.
All other trademarks mentioned are the property of their respective owners.

Typical Application Circuits (continued)

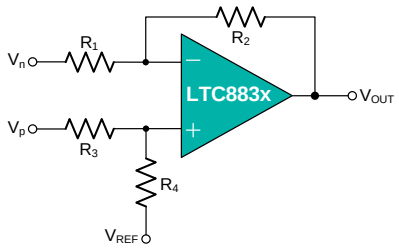

Figure 8. Differential Amplifier

INSTRUMENTATION AMPLIFIER

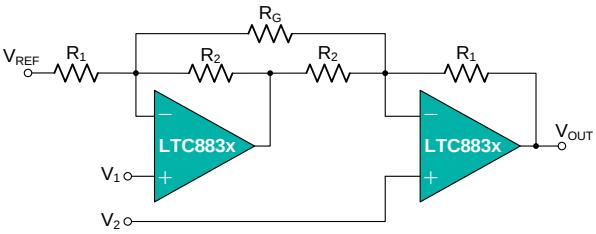

$$V_{OUT} = (V_1 - V_2)(1 + \frac{R_1}{R_2} + \frac{2R_1}{R_G}) + V_{REF}$$

Figure 9. Instrumentation Amplifier

The LTC883x family is well suited for conditioning sensor signals in battery-powered applications. Figure 9 shows a two op-amp instrumentation amplifier, using the LTC883x op-amps. The circuit works well for applications requiring rejection of common-mode noise at higher gains. The reference voltage (V_{REF}) is supplied by a low-impedance source. In single voltage supply applications, the V_{REF} is typically $V_S/2$.

BUFFERED CHEMICAL SENSORS

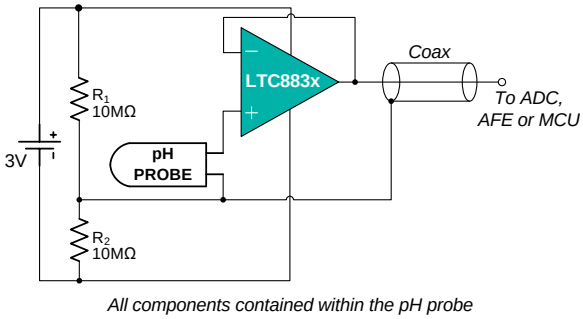

Figure 10. Buffered pH Probe

The LTC883x family has input bias current in the pA range. This is ideal in buffering high impedance chemical sensors, such as pH probes. As an example, the circuit in Figure 10 eliminates expansive low-leakage cables that that is required to connect a pH probe (general purpose combination pH probes, e.g Corning 476540) to metering ICs such as ADC, AFE and/or MCU. A LTC883x op-amp and a lithium battery are housed in the probe assembly. A conventional low-cost coaxial cable can be used to carry the op-amp's output signal to subsequent ICs for pH reading.

CAUTION: These devices are sensitive to electrostatic discharge; follow proper IC Handling Procedures.
Linearin and designs are registered trademarks of Linearin Technology Corporation.
© Copyright Linearin Technology Corporation. All Rights Reserved.
All other trademarks mentioned are the property of their respective owners.

Tape and Reel Information

REEL DIMENSIONS

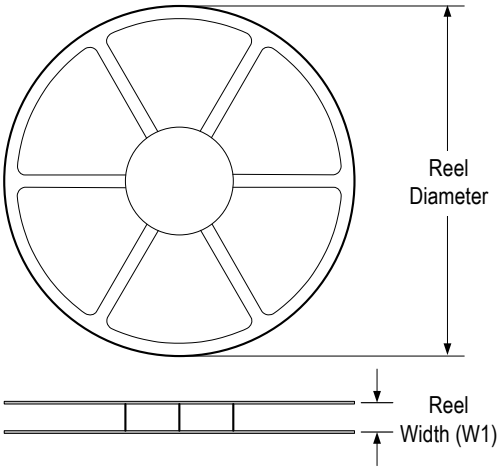

TAPE DIMENSIONS

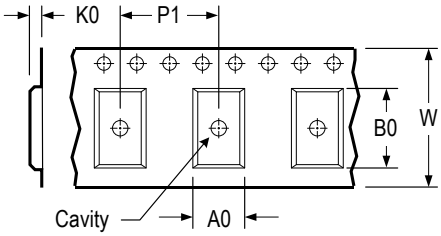

A0	Dimension designed to accommodate the component width
B0	Dimension designed to accommodate the component length
K0	Dimension designed to accommodate the component thickness
W	Overall width of the carrier tape
P1	Pitch between successive cavity centers

QUADRANT ASSIGNMENTS FOR PIN 1 ORIETATION IN TAPE

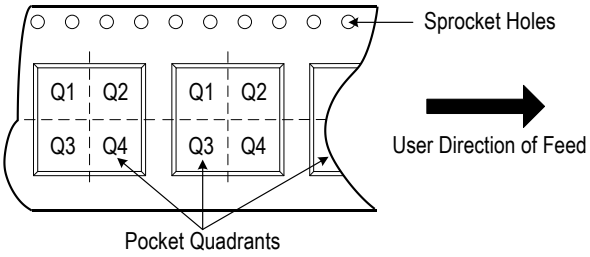

* All dimensions are nominal

Device	Package Type	Pins	SPQ	Reel Diameter (mm)	Reel Width W1 (mm)	A0 (mm)	B0 (mm)	K0 (mm)	P1 (mm)	W (mm)	Pin 1 Quadrant
LTC8831XT5/R6	SOT23	5	3 000	178	9.5	3.3	3.2	1.5	4.0	8.0	Q3
LTC8831XC5/R6	SC70	5	3 000	178	9.5	3.3	3.2	1.5	4.0	8.0	Q3
LTC8832XS8/R8	SOIC	8	4 000	330	12.5	6.6	5.3	2.0	8.0	12.0	Q1
LTC8832XF8/R6	DFN2x2	8	3 000	178	9.5	2.25	2.25	1.0	4.0	8.0	Q1
LTC8832XV8/R6	MSOP	8	3 000	330	12.5	5.0	3.5	2.0	8.0	12.0	Q1
LTC8832XT8/R8	TSSOP	8	4 000	330	12.5	6.5	4.0	1.2	8.0	12.0	Q1
LTC8834XS14/R5	SOIC	14	2 500	330	16.5	6.5	9.5	2.0	8.0	16.0	Q1
LTC8834XT14/R6	TSSOP	14	3 000	330	16.5	6.9	5.5	1.3	8.0	16.0	Q1

CAUTION: These devices are sensitive to electrostatic discharge; follow proper IC Handling Procedures.
Linearin and designs are registered trademarks of Linearin Technology Corporation.
© Copyright Linearin Technology Corporation. All Rights Reserved.
All other trademarks mentioned are the property of their respective owners.

Package Outlines

DIMENSIONS, SOT23-5L

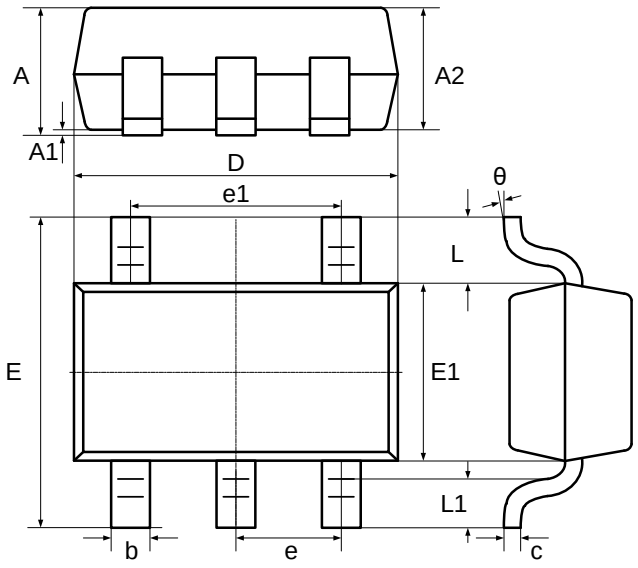

Symbol	Dimensions In Millimeters		Dimensions In Inches	
	Min	Max	Min	Max
A	-	1.25	-	0.049
A1	0.04	0.10	0.002	0.004
A2	1.00	1.20	0.039	0.047
b	0.33	0.41	0.013	0.016
c	0.15	0.19	0.006	0.007
D	2.820	3.02	0.111	0.119
E1	1.50	1.70	0.059	0.067
E	2.60	3.00	0.102	0.118
e	0.95 BSC		0.037 BSC	
e1	1.90 BSC		0.075 BSC	
L	0.60 REF		0.024 REF	
L1	0.30	0.60	0.012	0.024
θ	0°	8°	0°	8°

RECOMMENDED SOLDERING FOOTPRINT, SOT23-5L

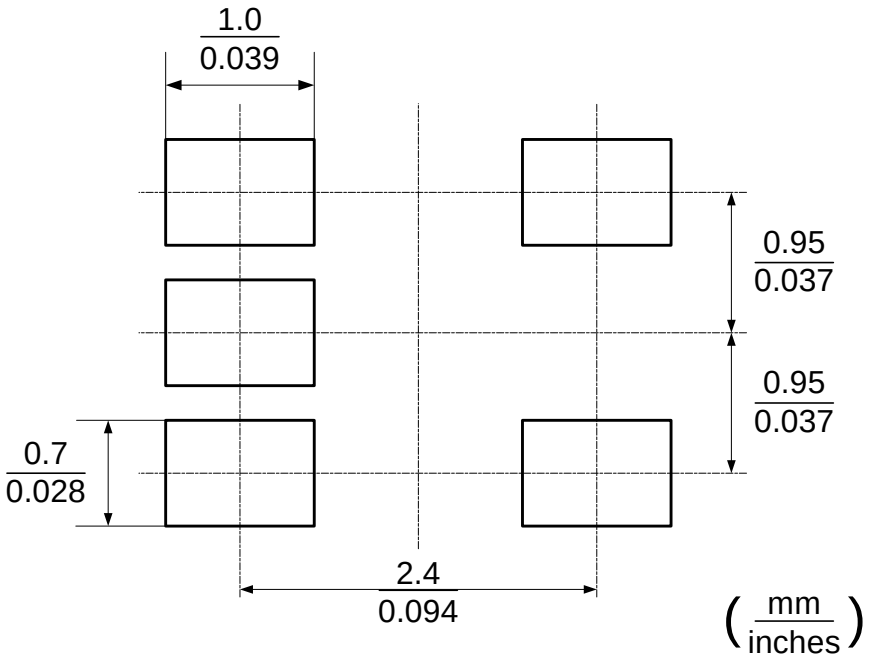

CAUTION: These devices are sensitive to electrostatic discharge; follow proper IC Handling Procedures.
Linearin and designs are registered trademarks of Linearin Technology Corporation.
© Copyright Linearin Technology Corporation. All Rights Reserved.
All other trademarks mentioned are the property of their respective owners.

Package Outlines (continued)

DIMENSIONS, SC70-5L (SOT353)

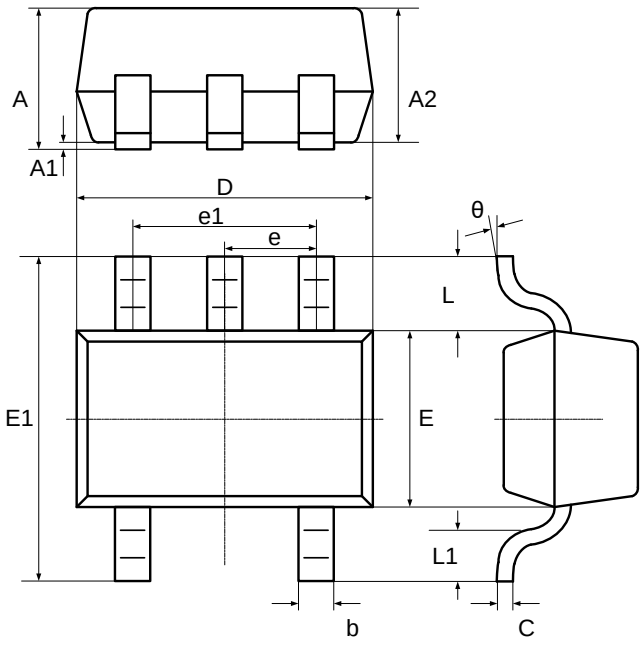

Symbol	Dimensions In Millimeters		Dimensions In Inches	
	Min	Max	Min	Max
A	0.90	1.10	0.035	0.043
A1	0.00	0.10	0.000	0.004
A2	0.90	1.00	0.035	0.039
b	0.15	0.35	0.006	0.014
C	0.08	0.15	0.003	0.006
D	2.00	2.20	0.079	0.087
E	1.15	1.35	0.045	0.053
E1	2.15	2.45	0.085	0.096
e	0.65 typ.		0.026 typ.	
e1	1.20	1.40	0.047	0.055
L	0.525 ref.		0.021 ref.	
L1	0.26	0.46	0.010	0.018
θ	0°	8°	0°	8°

RECOMMENDED SOLDERING FOOTPRINT, SC70-5L (SOT353)

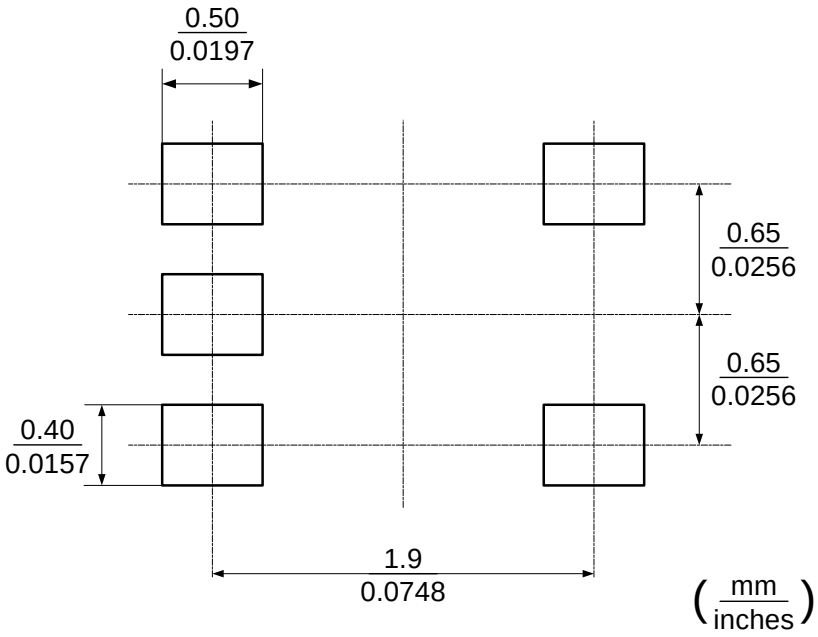

CAUTION: These devices are sensitive to electrostatic discharge; follow proper IC Handling Procedures.
Linearin and designs are registered trademarks of Linearin Technology Corporation.
© Copyright Linearin Technology Corporation. All Rights Reserved.
All other trademarks mentioned are the property of their respective owners.

Package Outlines (continued)

DIMENSIONS, SOIC-8L

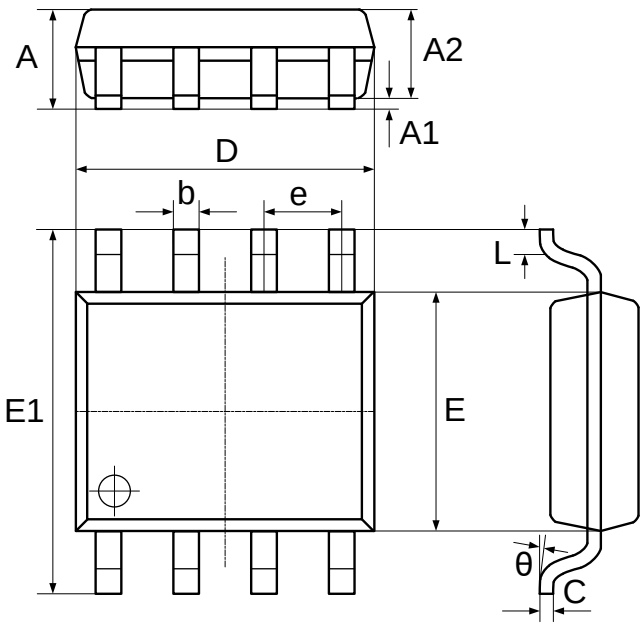

Symbol	Dimensions In Millimeters		Dimensions In Inches	
	Min	Max	Min	Max
A	1.370	1.670	0.054	0.066
A1	0.070	0.170	0.003	0.007
A2	1.300	1.500	0.051	0.059
b	0.306	0.506	0.012	0.020
C	0.203 TYP.		0.008 TYP.	
D	4.700	5.100	0.185	0.201
E	3.820	4.020	0.150	0.158
E1	5.800	6.200	0.228	0.244
e	1.270 TYP.		0.050 TYP.	
L	0.450	0.750	0.018	0.030
θ	0°	8°	0°	8°

RECOMMENDED SOLDERING FOOTPRINT, SOIC-8L

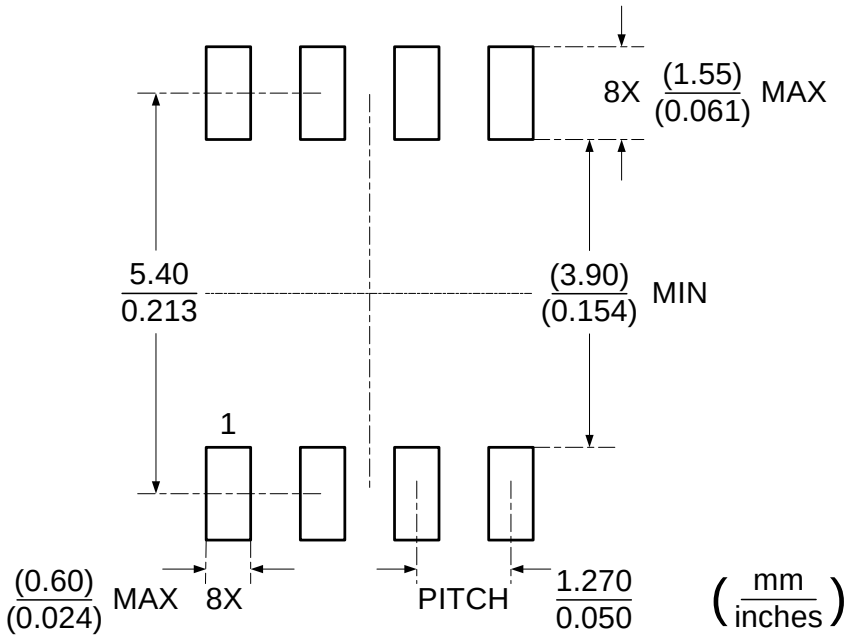

CAUTION: These devices are sensitive to electrostatic discharge; follow proper IC Handling Procedures.
Linearin and designs are registered trademarks of Linearin Technology Corporation.
© Copyright Linearin Technology Corporation. All Rights Reserved.
All other trademarks mentioned are the property of their respective owners.

Package Outlines (continued)

DIMENSIONS, MSOP-8L

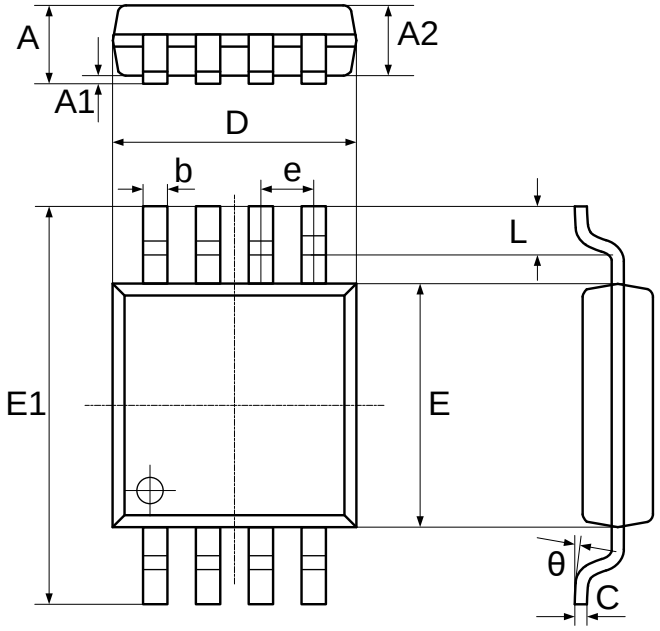

Symbol	Dimensions In Millimeters		Dimensions In Inches	
	Min	Max	Min	Max
A	0.800	1.100	0.031	0.043
A1	0.050	0.150	0.002	0.006
A2	0.750	0.950	0.030	0.037
b	0.290	0.380	0.011	0.015
C	0.150	0.200	0.006	0.008
D	2.900	3.100	0.114	0.122
E	2.900	3.100	0.114	0.122
E1	4.700	5.100	0.185	0.201
e	0.650 TYP.		0.026 TYP.	
L	0.400	0.700	0.016	0.028
θ	0°	8°	0°	8°

RECOMMENDED SOLDERING FOOTPRINT, MSOP-8L

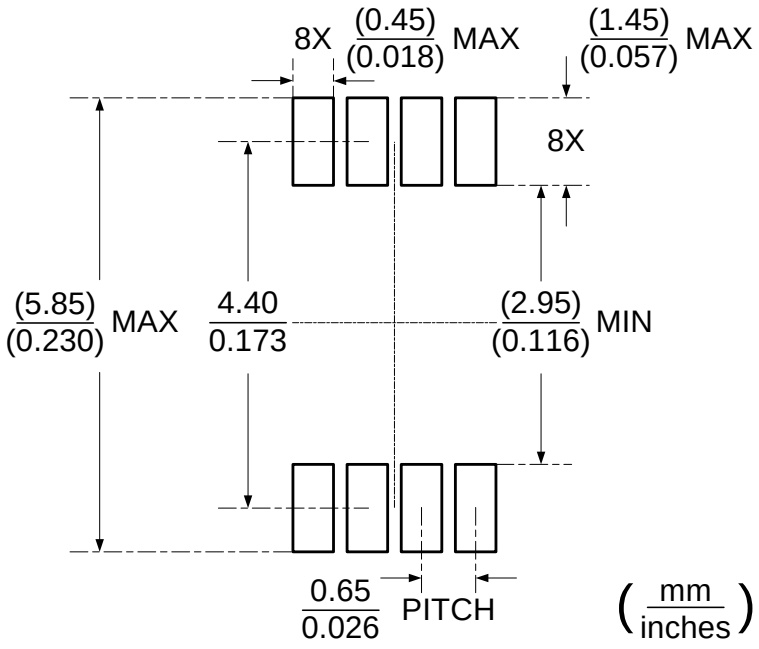

CAUTION: These devices are sensitive to electrostatic discharge; follow proper IC Handling Procedures.
Linearin and designs are registered trademarks of Linearin Technology Corporation.
© Copyright Linearin Technology Corporation. All Rights Reserved.
All other trademarks mentioned are the property of their respective owners.

Package Outlines (continued)

DIMENSIONS, DFN2x2-8L

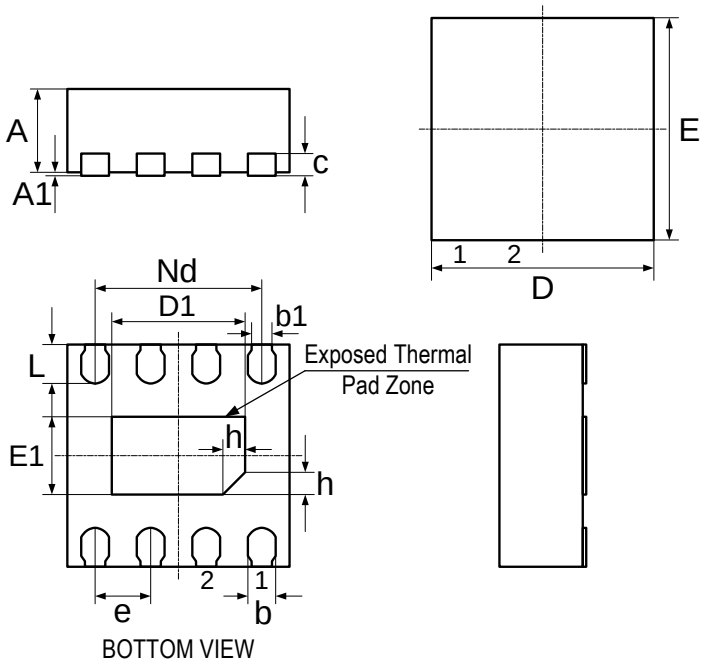

Symbol	Millimeters		
	Min.	Nom.	Max.
A	0.70	0.75	0.80
A1	-	0.02	0.05
b	0.20	0.25	0.30
b1		0.18 REF	
c	0.18	0.20	0.25
D	1.90	2.00	2.10
D1	1.10	1.20	1.30
Nd		1.50BSC	
E	1.90	2.00	2.10
E1	0.60	0.70	0.80
e		0.50BSC	
L	0.30	0.35	0.40
h	0.15	0.20	0.25

RECOMMENDED SOLDERING FOOTPRINT, DFN2x2-8L

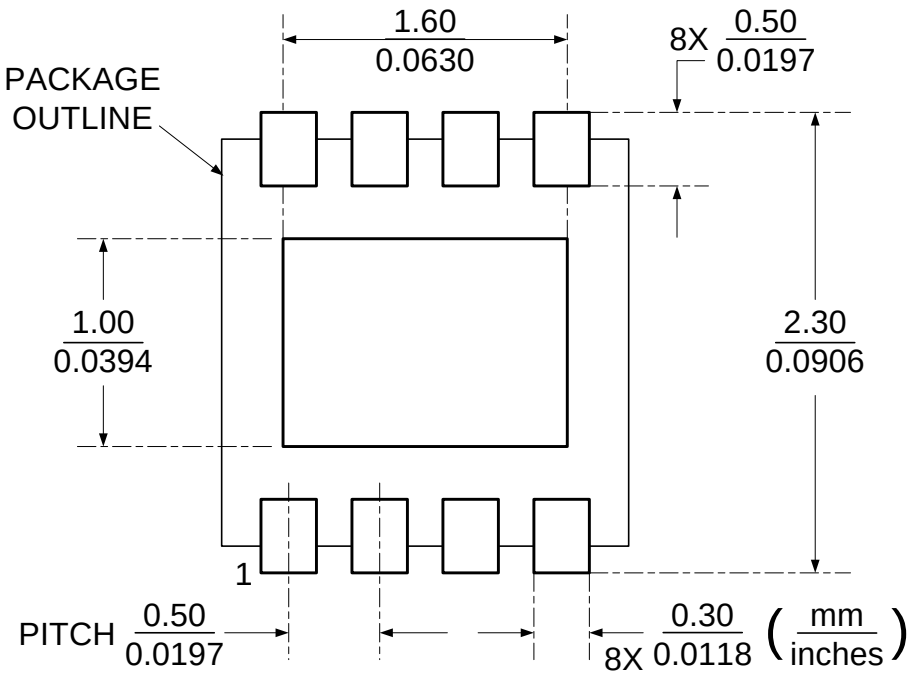

CAUTION: These devices are sensitive to electrostatic discharge; follow proper IC Handling Procedures.
Linearin and designs are registered trademarks of Linearin Technology Corporation.
© Copyright Linearin Technology Corporation. All Rights Reserved.
All other trademarks mentioned are the property of their respective owners.

Package Outlines (continued)

DIMENSIONS, TSSOP-8L

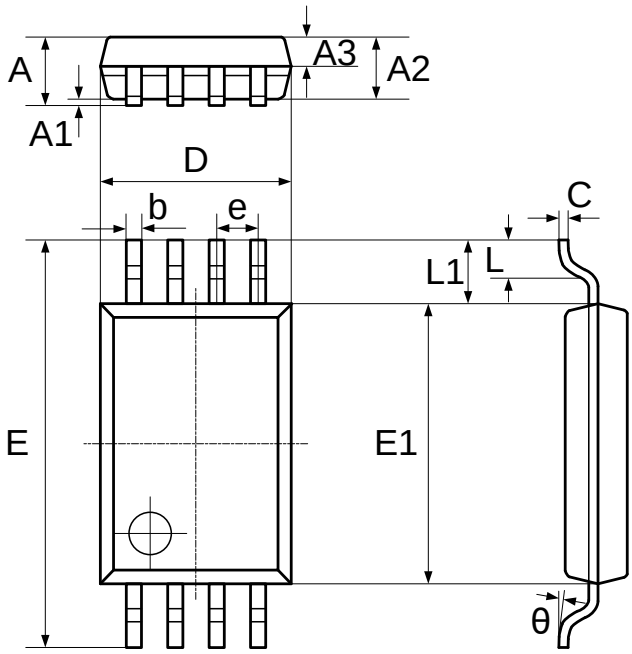

Symbol	Dimensions In Millimeters		Dimensions In Inches	
	Min	Max	Min	Max
A	-	1.200	-	0.047
A1	0.020	0.150	0.001	0.006
A2	0.900	1.050	0.035	0.041
A3	0.390	0.490	0.015	0.019
b	0.200	0.290	0.008	0.011
C	0.130	0.180	0.005	0.007
D	2.900	3.100	0.114	0.122
E	6.200	6.600	0.244	0.260
E1	4.300	4.500	0.169	0.177
e	0.650 typ.		0.026 typ.	
L1	1.000 ref.		0.039 ref.	
L	0.450	0.750	0.018	0.030
θ	0°	8°	0°	8°

RECOMMENDED SOLDERING FOOTPRINT, TSSOP-8L

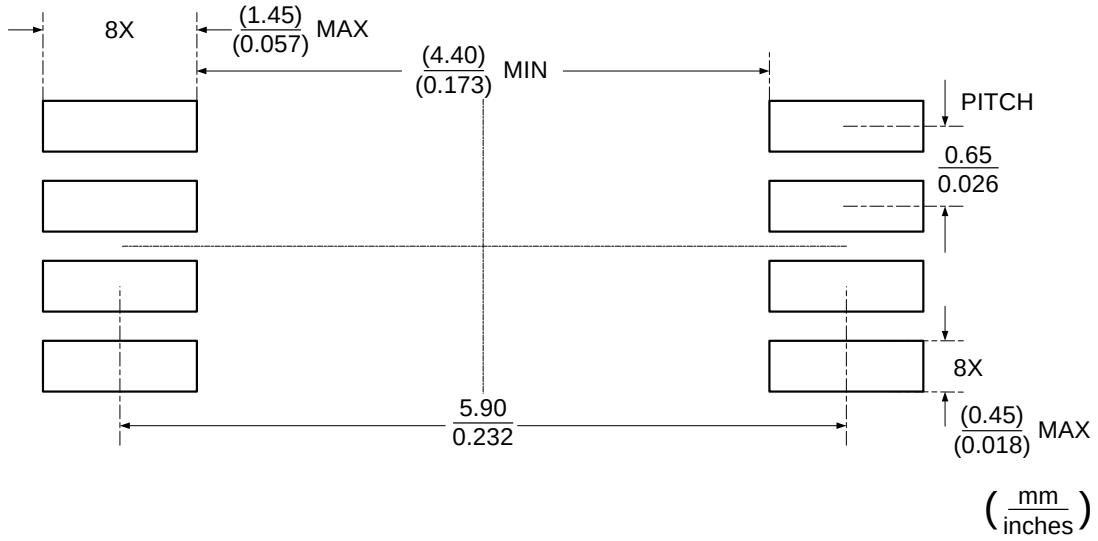

CAUTION: These devices are sensitive to electrostatic discharge; follow proper IC Handling Procedures.
Linearin and designs are registered trademarks of Linearin Technology Corporation.
© Copyright Linearin Technology Corporation. All Rights Reserved.
All other trademarks mentioned are the property of their respective owners.

Package Outlines (continued)

DIMENSIONS, SOIC-14L

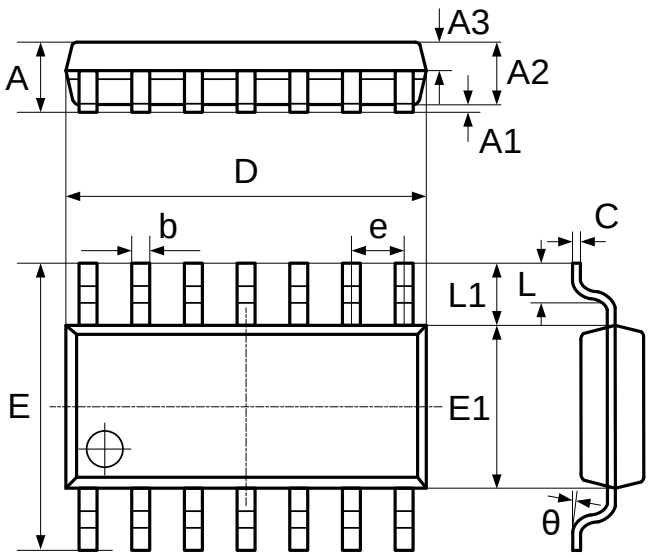

Symbol	Dimensions In Millimeters		Dimensions In Inches	
	Min	Max	Min	Max
A	1.450	1.850	0.057	0.073
A1	0.100	0.300	0.004	0.012
A2	1.350	1.550	0.053	0.061
A3	0.550	0.750	0.022	0.030
b	0.406 TYP.		0.016 TYP.	
C	0.203 TYP.		0.008 TYP.	
D	8.630	8.830	0.340	0.348
E	5.840	6.240	0.230	0.246
E1	3.850	4.050	0.152	0.159
e	1.270 TYP.		0.050 TYP.	
L1	1.040 REF.		0.041 REF.	
L	0.350	0.750	0.014	0.030
θ	2°	8°	2°	8°

RECOMMENDED SOLDERING FOOTPRINT, SOIC-14L

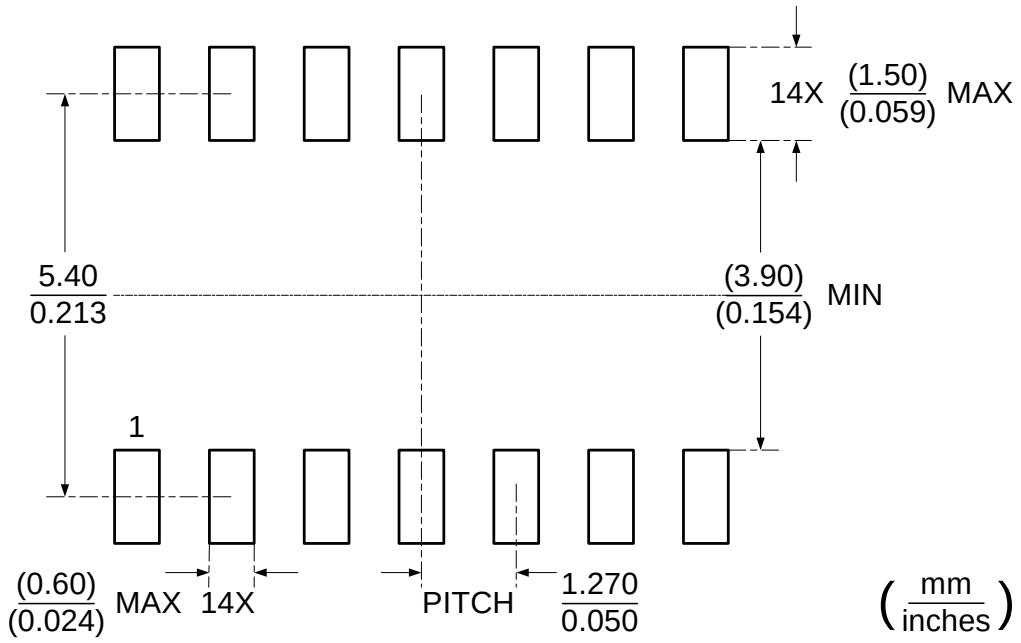

CAUTION: These devices are sensitive to electrostatic discharge; follow proper IC Handling Procedures.
Linearin and designs are registered trademarks of Linearin Technology Corporation.
© Copyright Linearin Technology Corporation. All Rights Reserved.
All other trademarks mentioned are the property of their respective owners.

Package Outlines (continued)

DIMENSIONS, TSSOP-14L

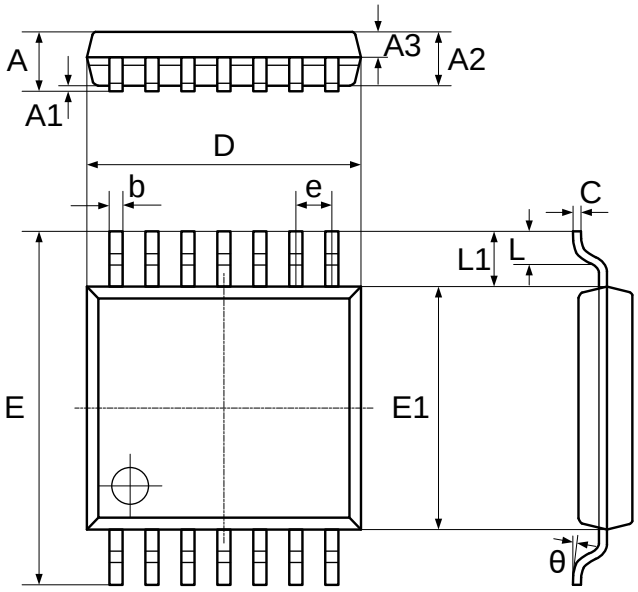

Symbol	Dimensions In Millimeters		Dimensions In Inches	
	Min	Max	Min	Max
A	-	1.200	-	0.047
A1	0.050	0.150	0.002	0.006
A2	0.900	1.050	0.035	0.041
A3	0.390	0.490	0.015	0.019
b	0.200	0.290	0.008	0.011
C	0.130	0.180	0.005	0.007
D	4.860	5.060	0.191	0.199
E	6.200	6.600	0.244	0.260
E1	4.300	4.500	0.169	0.177
e	0.650 TYP.		0.026 TYP.	
L1	1.000 REF.		0.039 REF.	
L	0.450	0.750	0.018	0.030
θ	0°	8°	0°	8°

RECOMMENDED SOLDERING FOOTPRINT, TSSOP-14L

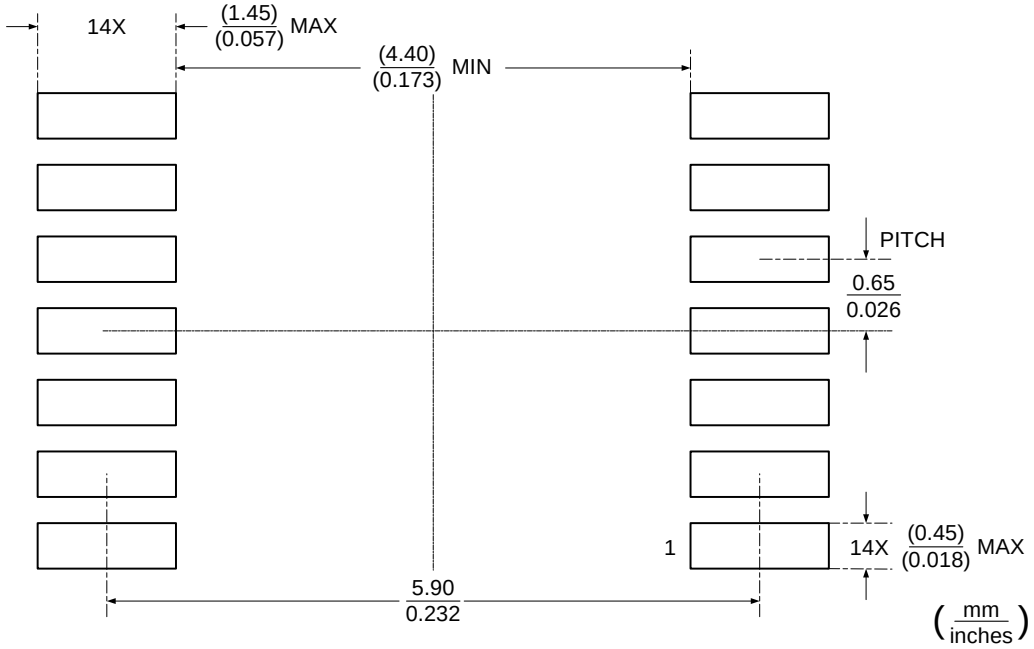

CAUTION: These devices are sensitive to electrostatic discharge; follow proper IC Handling Procedures.
Linearin and designs are registered trademarks of Linearin Technology Corporation.
© Copyright Linearin Technology Corporation. All Rights Reserved.
All other trademarks mentioned are the property of their respective owners.

Important Notice

Linearin is a global fabless semiconductor company specializing in advanced high-performance high-quality analog/mixed-signal IC products and sensor solutions. The company is devoted to the innovation of high performance, analog-intensive sensor front-end products and modular sensing solutions, applied in multi-market of medical & wearable devices, smart home, sensing of IoT, and intelligent industrial & smart factory (industrie 4.0). Linearin's product families include widely-used standard catalog products, solution-based application specific standard products (ASSPs) and sensing solutions that help customers achieve faster time-to-market products. Go to http://www.linearin.com for a complete list of Linearin product families.

For additional product information, or full datasheet, please contact with the Linearin's Sales Department or Representatives.

CAUTION: These devices are sensitive to electrostatic discharge; follow proper IC Handling Procedures.
Linearin and designs are registered trademarks of Linearin Technology Corporation.
© Copyright Linearin Technology Corporation. All Rights Reserved.
All other trademarks mentioned are the property of their respective owners.